THOMAS SHEA

PLAN VIEW

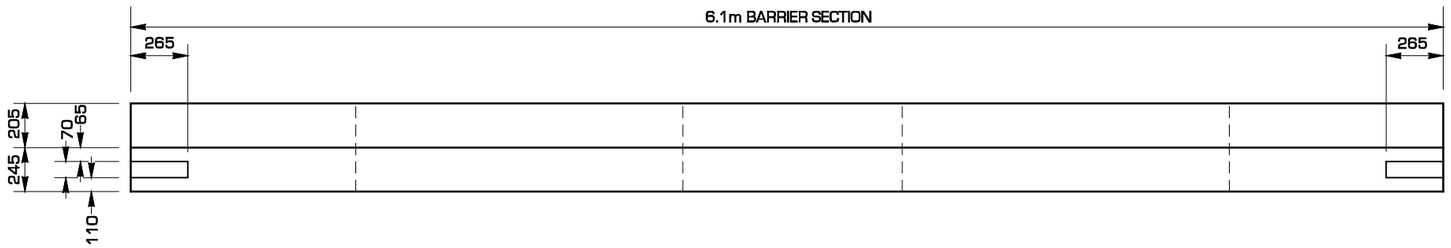

ELEVATION VIEW

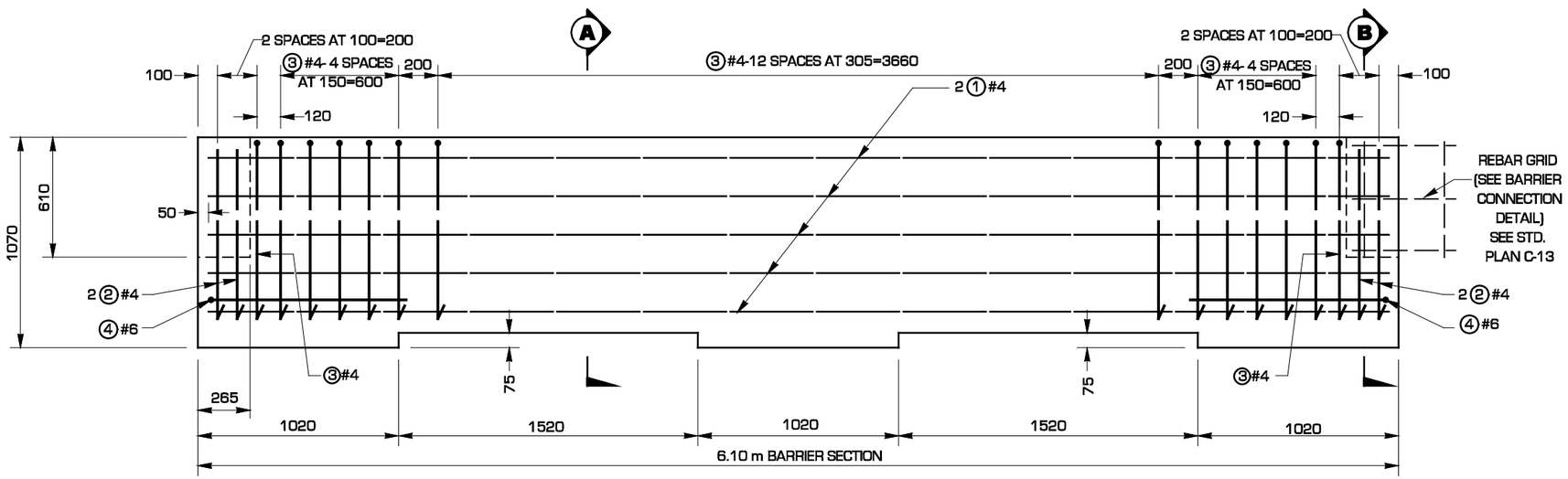

SECTIONS

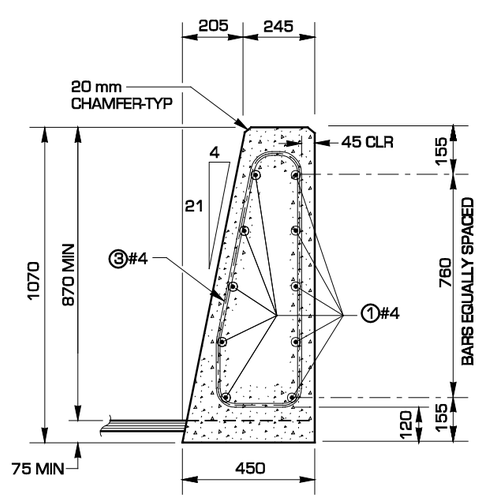

A SECTION

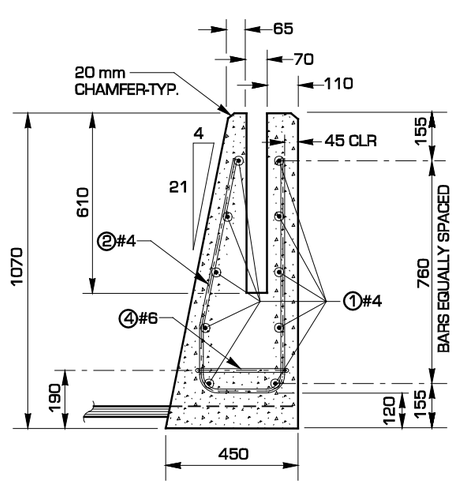

B SECTION

BAR LIST

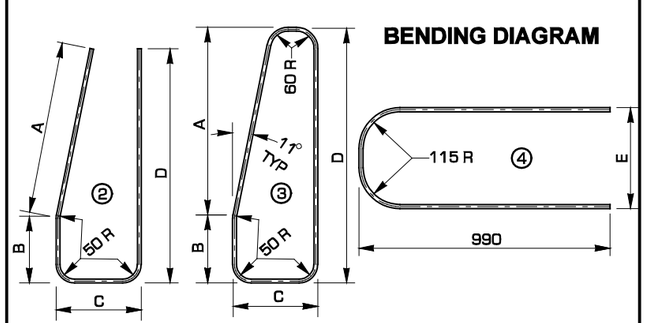

	MARK	SIZE	No.	LENGTH	A	B	C	D	E
1.07 m	1	#4	10	6000 str.	-	-	-	-	-
	2	#4	8	1790	580	200	240	770	-
	3	#4	25	2000	650	200	240	815	-
	4	#6	2	2140	-	-	-	-	240

ALL DIMENSIONS ARE IN MILLIMETERS UNLESS OTHERWISE NOTED

CLIFFORD E. MANSFIELD STATE OF WASHINGTON 15224 REGISTERED PROFESSIONAL ENGINEER

EXPIRES MAY 3, 2000

SINGLE SLOPE BARRIER PRE-CAST TYPE SINGLE SIDED SECTION STANDARD PLAN C-13b

NOTE: THIS PLAN IS NOT A LEGAL ENGINEERING DOCUMENT BUT AN ELECTRONIC DUPLICATE. THE ORIGINAL, SIGNED BY THE ENGINEER AND APPROVED FOR PUBLICATION, IS KEPT ON FILE AT THE WASHINGTON STATE DEPARTMENT OF TRANSPORTATION. A COPY MAY BE OBTAINED UPON REQUEST.

APPROVED FOR PUBLICATION

Clifford E. Mansfield *04-16-99*

DEPUTY STATE DESIGN ENGINEER — DATE

WASHINGTON STATE DEPARTMENT OF TRANSPORTATION
OLYMPIA, WASHINGTON