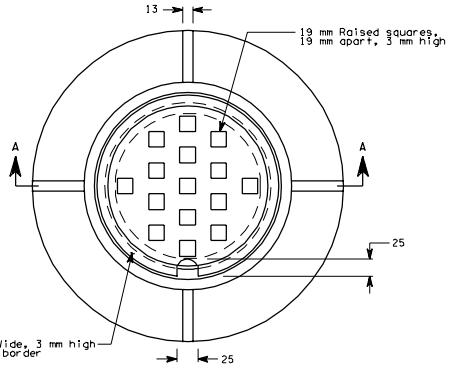

PLAN

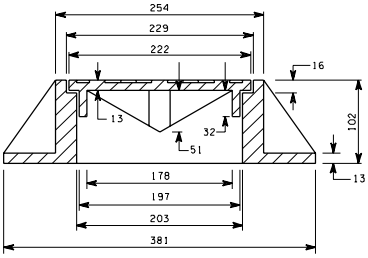

SECTION A-A

CAST IRON RING AND COVER

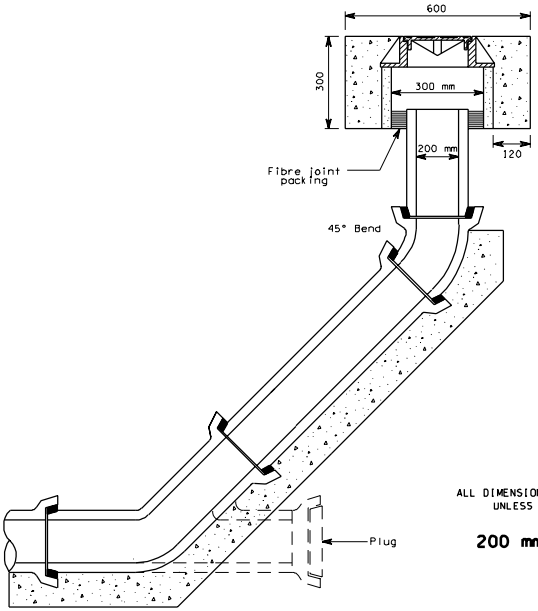

ALL DIMENSIONS ARE IN MILLIMETERS UNLESS OTHERWISE NOTED

200 mm CLEAN-OUT