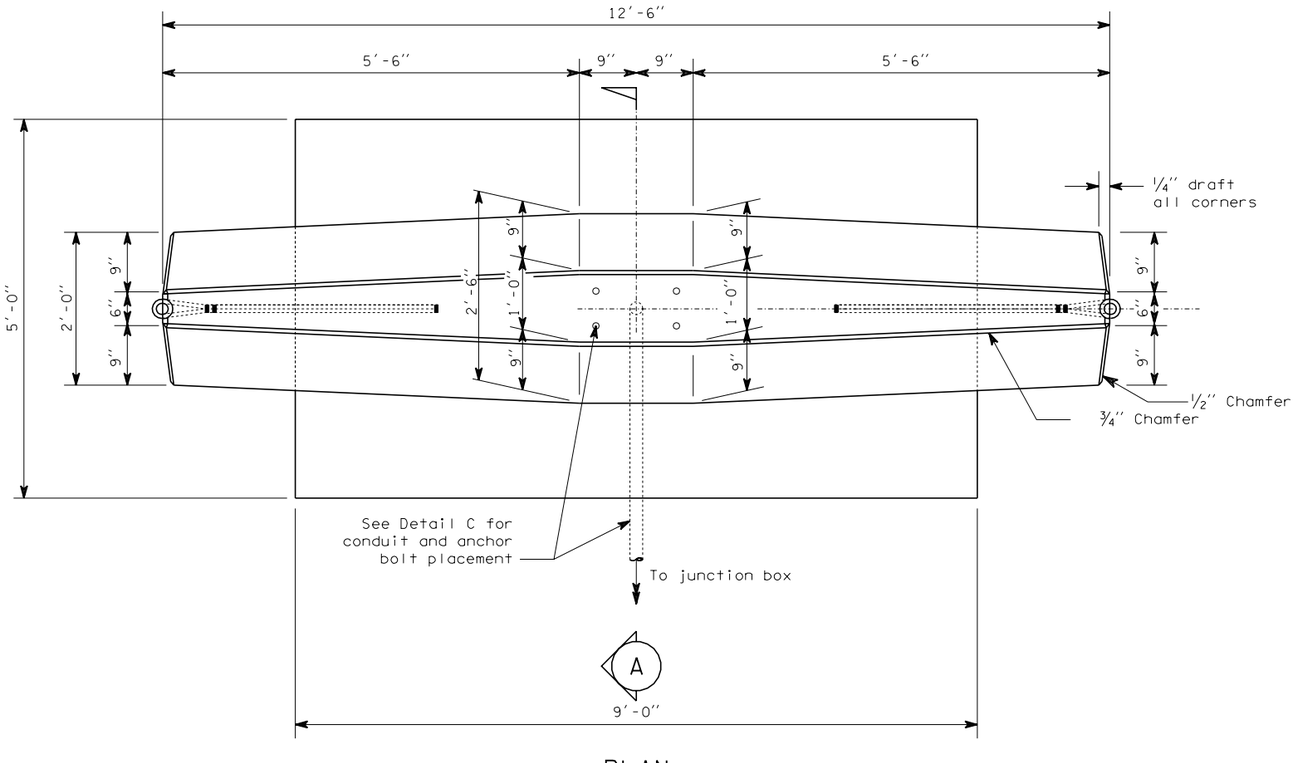

PLAN

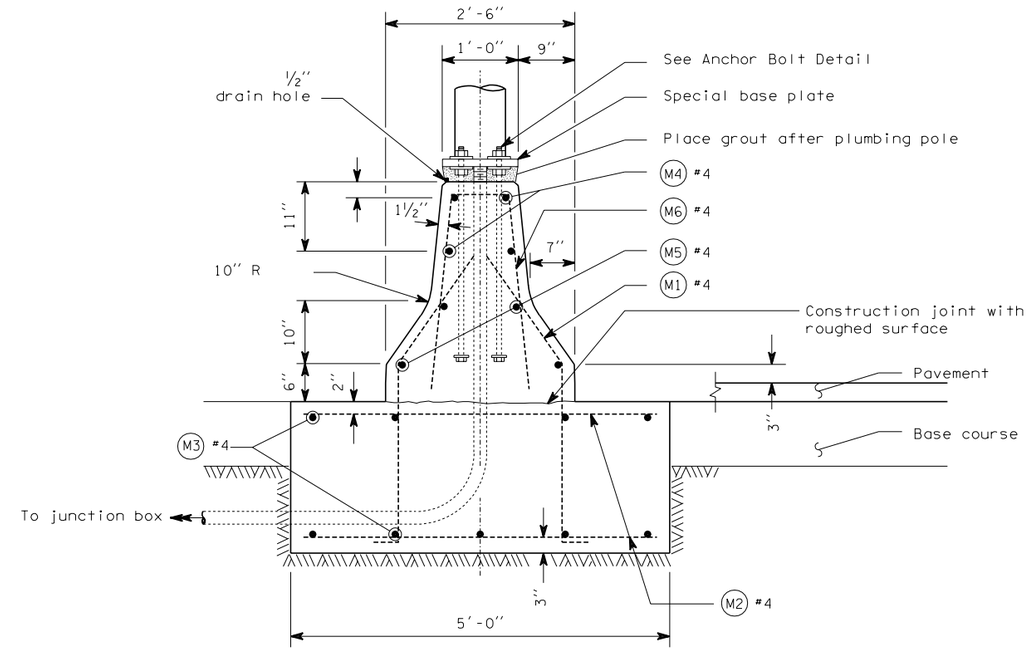

A SECTION

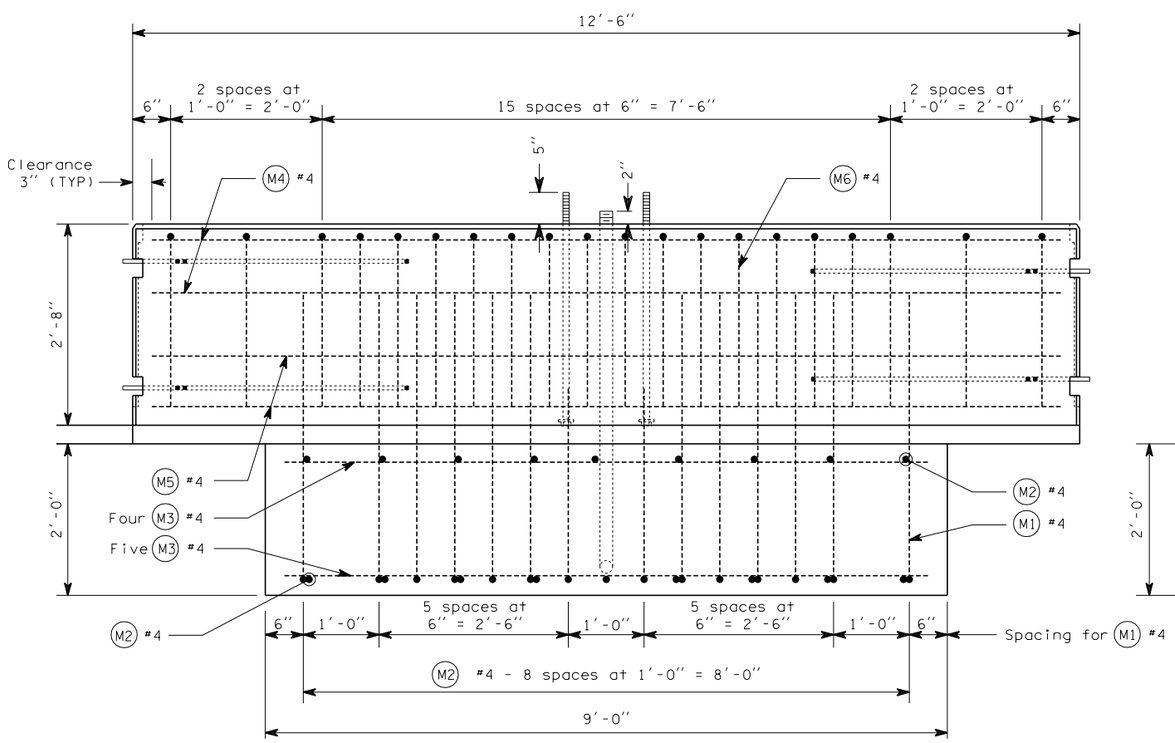

ELEVATION

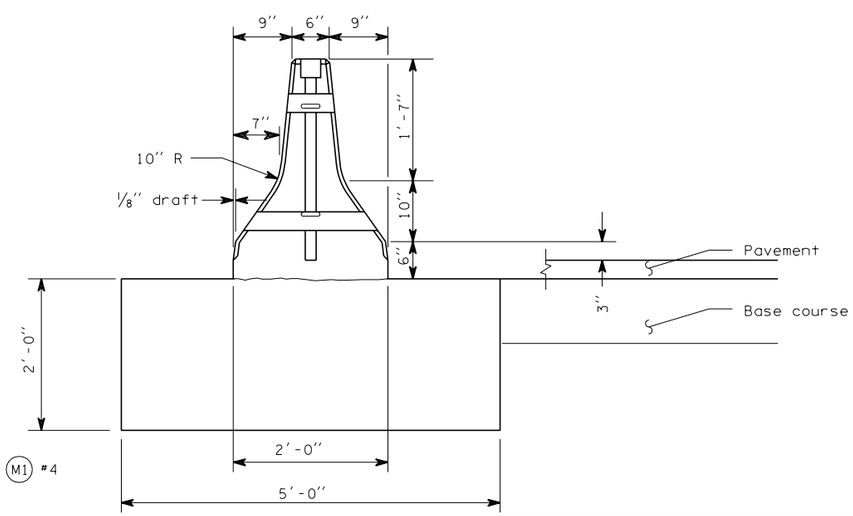

END VIEW

EXPIRES JANUARY 17, 1999

CONCRETE BARRIER LIGHT STANDARD SECTION STANDARD PLAN C-8b

SHEET 1 OF 2 SHEETS

NOTE: THIS PLAN IS NOT A LEGAL ENGINEERING DOCUMENT BUT AN ELECTRONIC DUPLICATE. THE ORIGINAL, SIGNED BY THE ENGINEER AND APPROVED FOR PUBLICATION, IS KEPT ON FILE AT THE WASHINGTON STATE DEPARTMENT OF TRANSPORTATION. A COPY MAY BE OBTAINED UPON REQUEST.

APPROVED FOR PUBLICATION

Clifford E. Mansfield — DEPUTY STATE DESIGN ENGINEER

7/17/98 — DATE

WASHINGTON STATE DEPARTMENT OF TRANSPORTATION
OLYMPIA, WASHINGTON