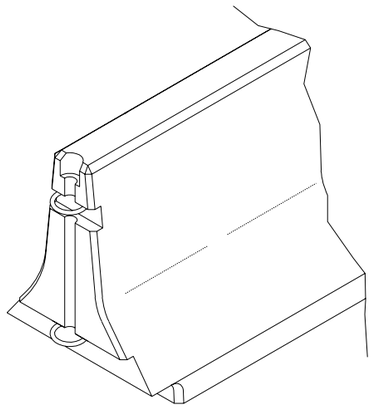

BARRIER SEGMENT
END VIEW

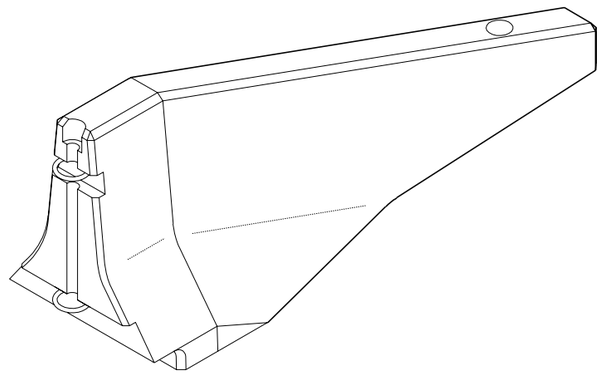

END SECTION VIEW

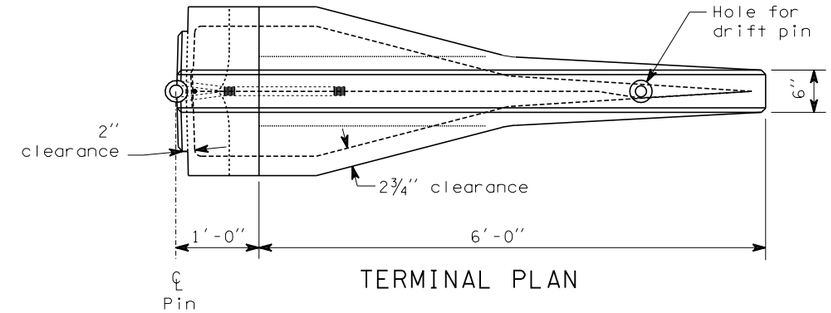

TERMINAL PLAN

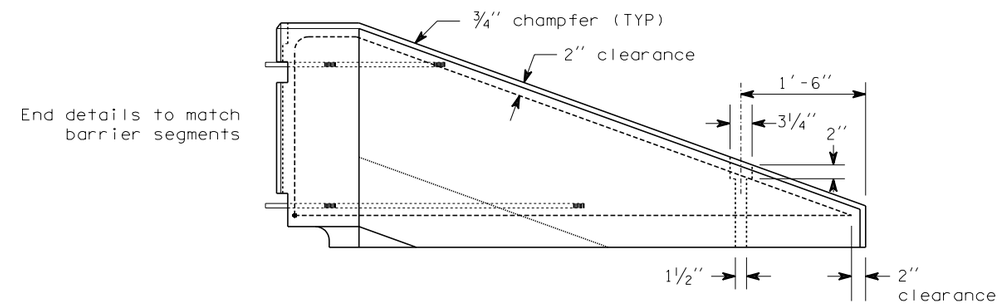

TERMINAL ELEVATION

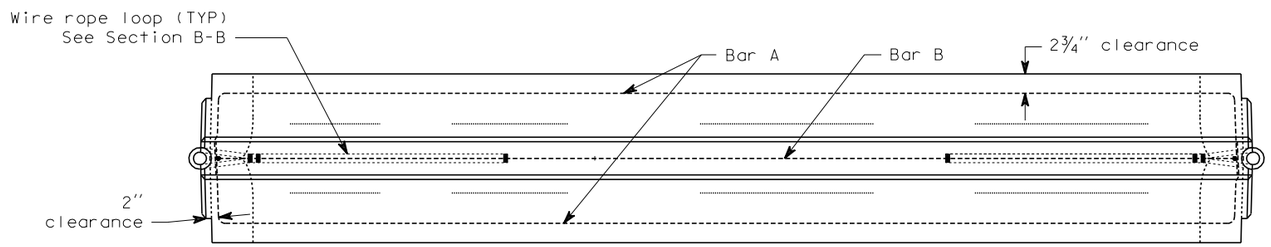

BARRIER SEGMENT
PLAN

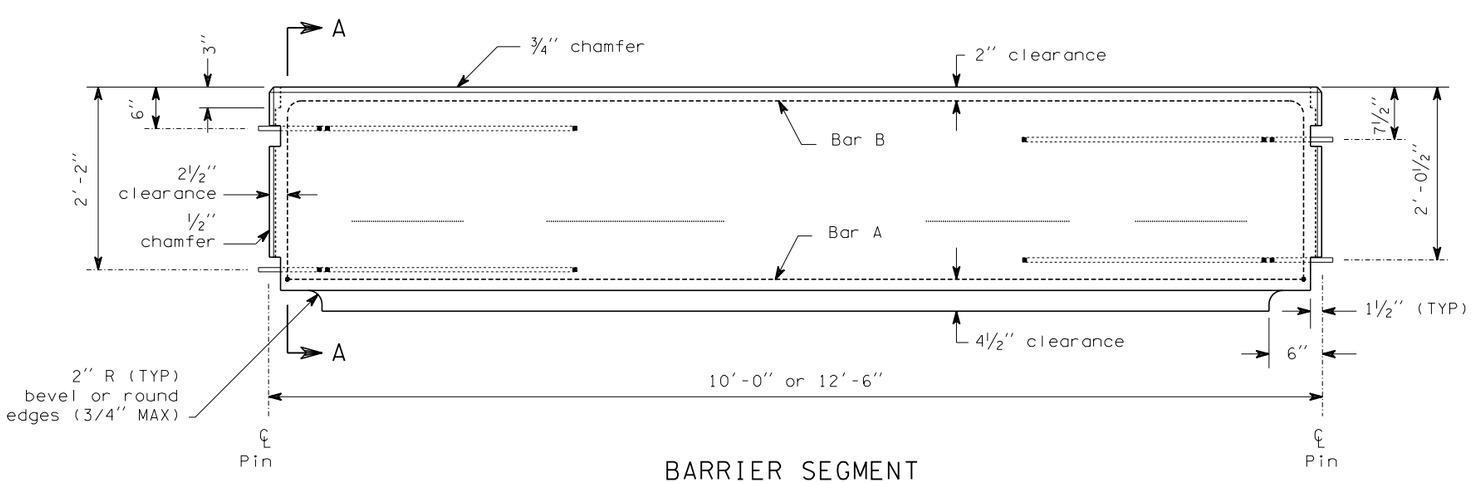

BARRIER SEGMENT
ELEVATION

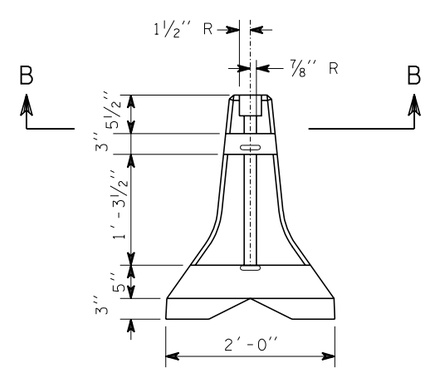

END VIEW

CLIFFORD E. MANSFIELD
STATE OF WASHINGTON
15224
REGISTERED
PROFESSIONAL ENGINEER

EXPIRES MAY 3, 2000

CONCRETE BARRIER TYPE 2

STANDARD PLAN C-8

SHEET 1 OF 2 SHEETS

NOTE: THIS PLAN IS NOT A LEGAL ENGINEERING DOCUMENT BUT AN ELECTRONIC DUPLICATE THE ORIGINAL SIGNED BY THE ENGINEER AND APPROVED FOR PUBLICATION, IS KEPT ON FILE AT THE WASHINGTON STATE DEPARTMENT OF TRANSPORTATION. A COPY MAY BE OBTAINED UPON REQUEST.

DATE	REVISION	BY
8/98	Change wire rope loop seizing, added notes 1 and 1	RAB

APPROVED FOR PUBLICATION

Clifford E. Mansfield — *8/10/98*

DEPUTY STATE DESIGN ENGINEER — DATE

WASHINGTON STATE DEPARTMENT OF TRANSPORTATION
OLYMPIA, WASHINGTON