NOTES

1. Rail section and W8 x 17 post shall be fabricated to receive 5/8" hex head bolts as shown.

2. All bolts shall be high strength 5/8" hex head bolts with anchor rail washers.

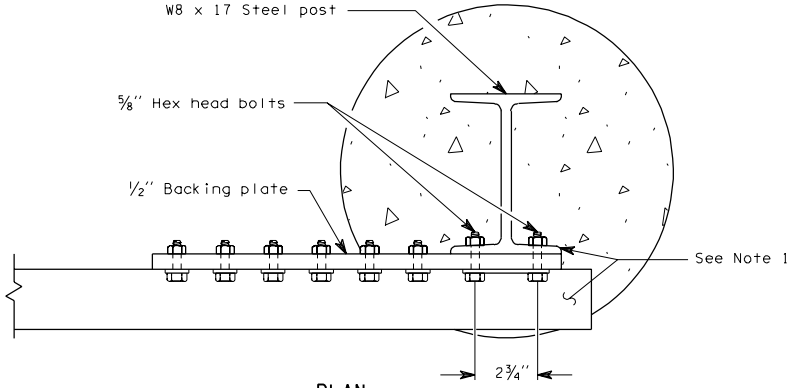

PLAN

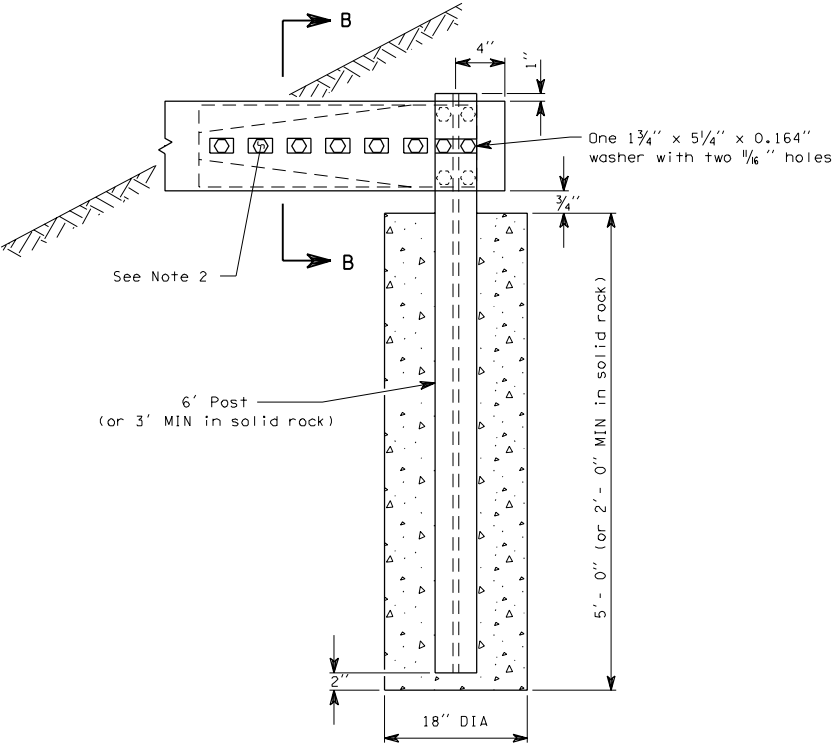

ELEVATION

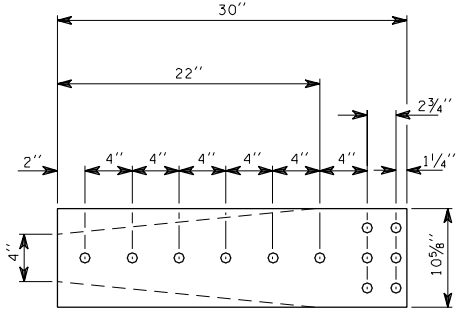

BACKING PLATE

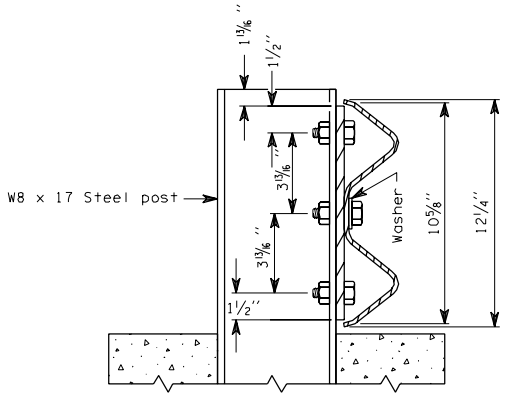

SECTION B-B

BEAM GUARDRAIL ANCHOR TYPE 2