NOTES

1. Span and rise dimensions are nominal and are measured to the inside crests of corrugations.

2. Allowable heights of cover shall be within the limits indicated in the table included hereon. Minimums and maximums are shown.

3. Unless indicated otherwise a 10" depth (over the inside crests of corrugatons) of earth shall be placed in the invert of the Structural Plate Underpass, Design 1, for its full width and length. The earth shall consist of natural occurring materials available in the vicinity of the structural plate underpass installation.

4. Designed for H-20 live load and maximum allowable soil pressure of 6 Kips per square foot.

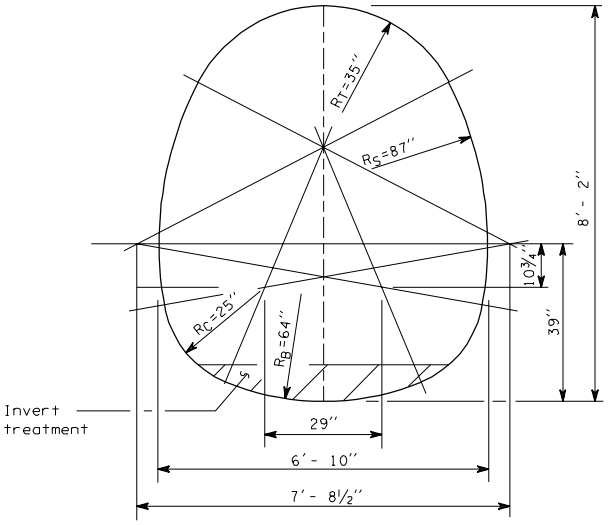

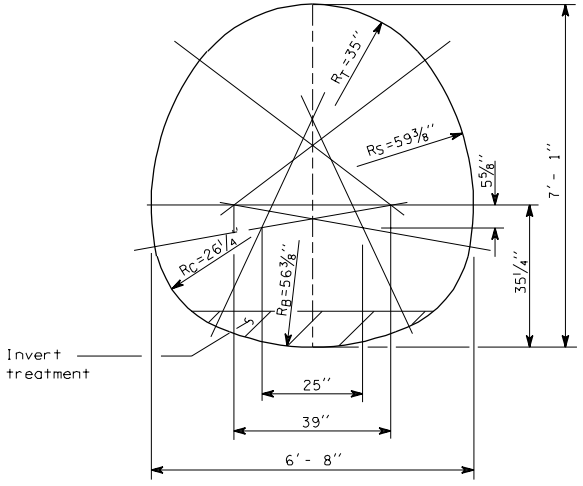

SECTION

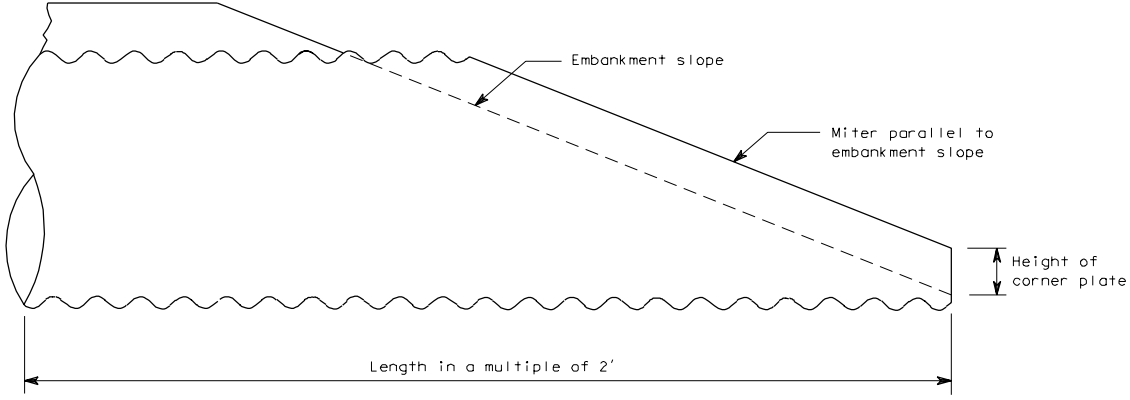

ELEVATION

ALLOWABLE HEIGHTS OF COVER		
SPAN	RISE	12 GAGE THICK METAL
6'- 8"	7'- 1"	4'- 26'
6'- 10"	8'- 2"	5'- 25'

CORRUGATED METAL

STRUCTURAL PLATE UNDERPASS DESIGN 1