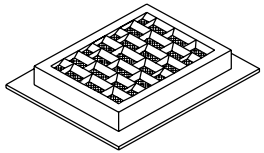

FRAME AND VANED GRATE

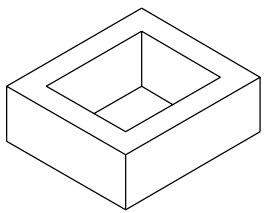

RECTANGULAR ADJUSTMENT SECTION

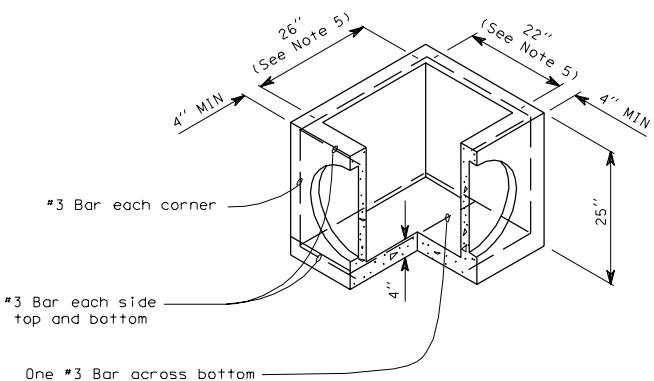

PRECAST BASE SECTION

NOTES

1. As an acceptable alternate to rebar, wire mesh having a minimum area of 0.12 square inches per foot may be used. Wire mesh shall not be placed in knockouts.

2. The knockout diameter shall not be greater than 18". Knockouts shall have a wall thickness of 1½" minimum to 2" maximum.

3. Frame and grate may be installed with flange down or cast into adjustment section.

4. The precast base section may have a rounded floor and the walls may be sloped at a rate of 1:24 or steeper.

5. Opening shall be measured at the top of the precast base section.

CONCRETE INLET