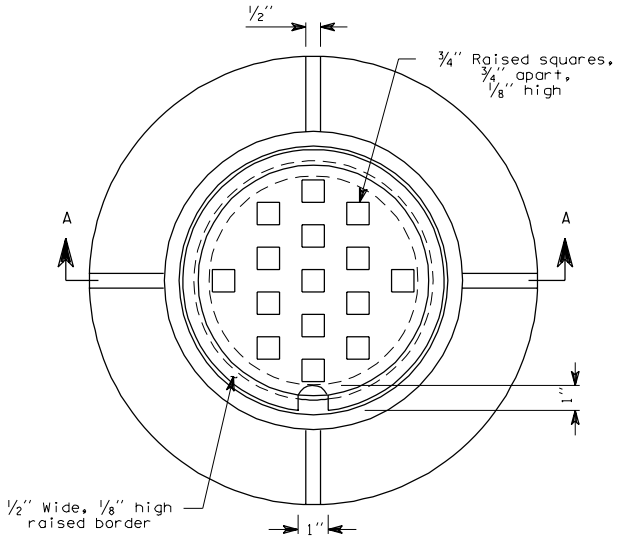

PLAN

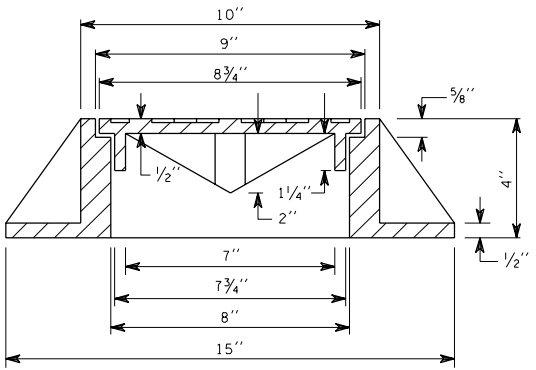

SECTION A-A

CAST IRON RING AND COVER

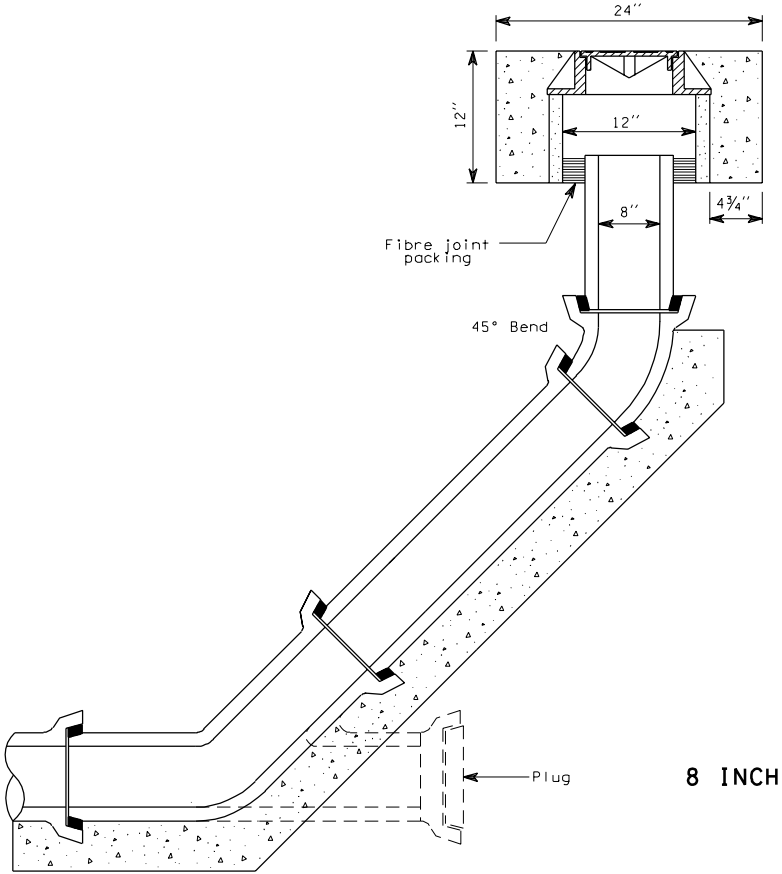

8 INCH CLEAN-OUT