NOTE: A 4'-0" offset is to be installed unless otherwise specified in the contract or by the Engineer.

WASHINGTON STATE DEPARTMENT OF TRANSPORTATION

☐ Approved

☒ Approved with revision

☐ Rejected

See notes for revisions

BY: Rull B Ali

DATE: 10/10/00

POST OFFSET DIMENSION TABLE			
POST No	* SYSTEM END OFFSET		
	3'-0"	3'-6"	4'-0" *
(1)	36"	42"	48"
(2)	22 1/4"	27 3/4"	33 1/2"
(3)	11 3/4"	16 1/2"	21 1/4"
(4)	6 3/4"	10 5/8"	14 3/4"
(5)	3"	6"	9 1/2"
(6)	3/4"	2 3/4"	5 3/8"
(7)	0	3/4"	2 3/8"
(8)	0	0	5/8"
(9)	0	0	0

OFFSET NOTE:
THE POST OFFSET DIMENSIONS ARE GIVEN TO THE CENTER OF THE TRAFFIC FACE OF THE BLOCKOUTS., EXCEPT AT THE FIRST TWO POSTS, WHERE THE DIMENSION IS TO THE CENTER OF THE TRAFFIC FACE OF THE POST. OFFSET POINTS ARE TO BE LOCATED BY CHORD MEASUREMENTS AT THE BACK OF THE RAIL EQUAL TO THE NOMINAL POST SPACINGS SHOWN. POSTS ARE TO BE SET APPROXIMATELY RADIAL TO THE RAILING AT EACH POST LOCATION.

⚠ * REFER TO STATE DEPARTMENT OF TRANSPORTATION SPECIFICATIONS, STANDARD DRAWINGS AND/OR PROPOSAL DOCUMENTS FOR ALLOWABLE SYSTEM END OFFSET.

NOTE (9/10/01)
Part 30G (rail panel) is an acceptable alternate for part 34G

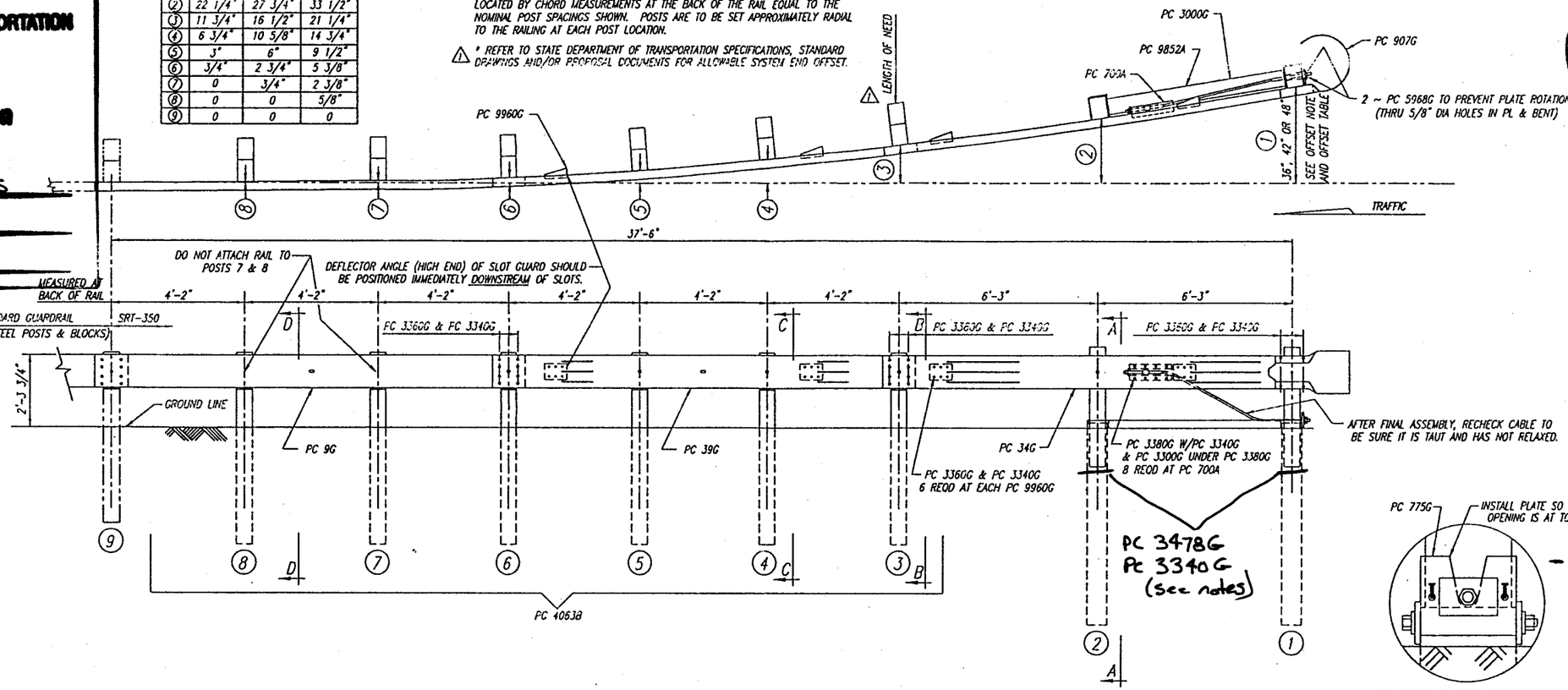

BILL OF MATERIAL

PC	QTY	DESCRIPTION
9G	1	12/12'6/6'3/S (GUARDRAIL)
34G	1	12/12'6/6'3/S SRT-1 (GUARDRAIL)
39G	1	12/12'6/S SRT-2 (GUARDRAIL)
700A	1	CABLE ANCHOR BRACKET
705G	1	2"ø x 5 1/2" PIPE
742G	2	6'0 TUBE SLEEVE
775G	1	5/8 x 6 x 8 BEARING PLATE
907G	1	12/BUFFER/ROLLED (TERMINAL)
3000G	1	3/4 x 6'6 CABLE
3300G	20	5/8" WASHER
3340G	62	5/8" HEX NUT
3360G	44	5/8"ø x 1 1/4" SPLICE BOLT
3380G	8	5/8"ø x 1 1/2" HEX HD BOLT
3497G	2	5/8"ø x 9 1/2" HEX HD BOLT
3500G	2	5/8"ø x 10" POST BOLT
3580G	6	5/8"ø x 18" POST BOLT
3900G	1	1" WASHER
3910G	2	1" HEX NUT
4063B	6	6'0 POST 6 x 8
4075B	6	14" BLOCK 6 x 8
6058B	2	3' 9 POST 5 1/2 x 7 1/2
5968G	2	16d NAIL SRT
9852A	1	STRUT ASSEMBLY
9960G	4	SLOT GUARD
9961G	1	3/8 x 3 x 4 PLATE WASHER

BEARING PLATE ORIENTATION

NOTE:
- A 4'-6" post sleeve option may be used.
Parts:
740G - 4'-6" tube sleeve
766G - 18" x 24" soil plate
3478G - 5/8" x 7 1/2" hex bolt

- When 6' tube sleeve is used, a bolt shall be installed as shown.
Part:
3478G - 5/8" x 7 1/2" hex bolt

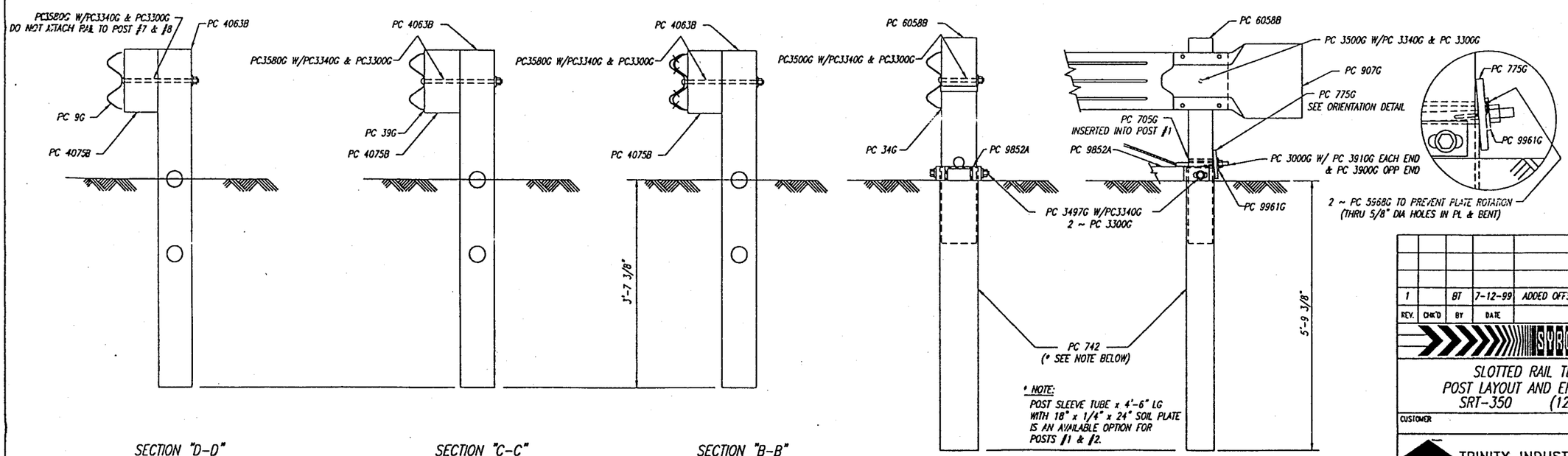

SECTION "D-D" (@ POST #7 & #8)

SECTION "C-C" (@ POSTS #4, & #5)

SECTION "B-B" (@ POSTS #3 & #6)

SECTION "A-A" (@ POST #2)

ENLARGED VIEW @ POST #1

* NOTE:
POST SLEEVE TUBE x 4'-6" LG WITH 18" x 1/4" x 24" SOIL PLATE IS AN AVAILABLE OPTION FOR POSTS #1 & #2.

This drawing and the information shown thereon is the sole property of TRINITY INDUSTRIES, INC. Neither the drawing nor such information is to be used for any purpose other than that for which it was specifically furnished by TRINITY INDUSTRIES, INC., nor is any reproduction authorized without written permission.

REV.	CHK'D	BY	DATE	REMARKS
1		BT	7-12-99	ADDED OFFSET NOTE & LENGTH OF NEED

SYRO SRT-350

SLOTTED RAIL TERMINAL
POST LAYOUT AND ERECTION DETAILS
SRT-350 (12.5, 8 POST)

CUSTOMER | P.O. No.

TRINITY INDUSTRIES, INC. SYRO
DALLAS, TX CENTERVILLE, UT GRAND, OH LIMA, OH FORT WORTH, TX ELIZABETHTOWN, KY

DRAWN	B. TAKACH
CHECKED	
APPROVED	
DATE	5-21-99
ENG. FILE #	SS444
SHT. No.	E1 OF 1
DRAWING No.	SS 444
REV.	1

F:\PLT33\Share\Dwg\Proprietary Products\SRT350\Ss444.dwg Wed Jul 14 14:50:22 1999 rmh