WASHINGTON STATE DEPARTMENT OF TRANSPORTATION

☐ Approved

☑ Approved with revision

☐ Rejected

for Pay length See Standard Plan C4E

BY: Doug McLanahan

DATE: 1/10/03

NOTE:
INSTALL RAIL PARALLEL TO ROADWAY EDGE LINE. WHEN TAPER IS REQUIRED BY DESIGN ENGINEER, A 25:1 TAPER OVER THE LENGTH OF SYSTEM IS ALLOWABLE.

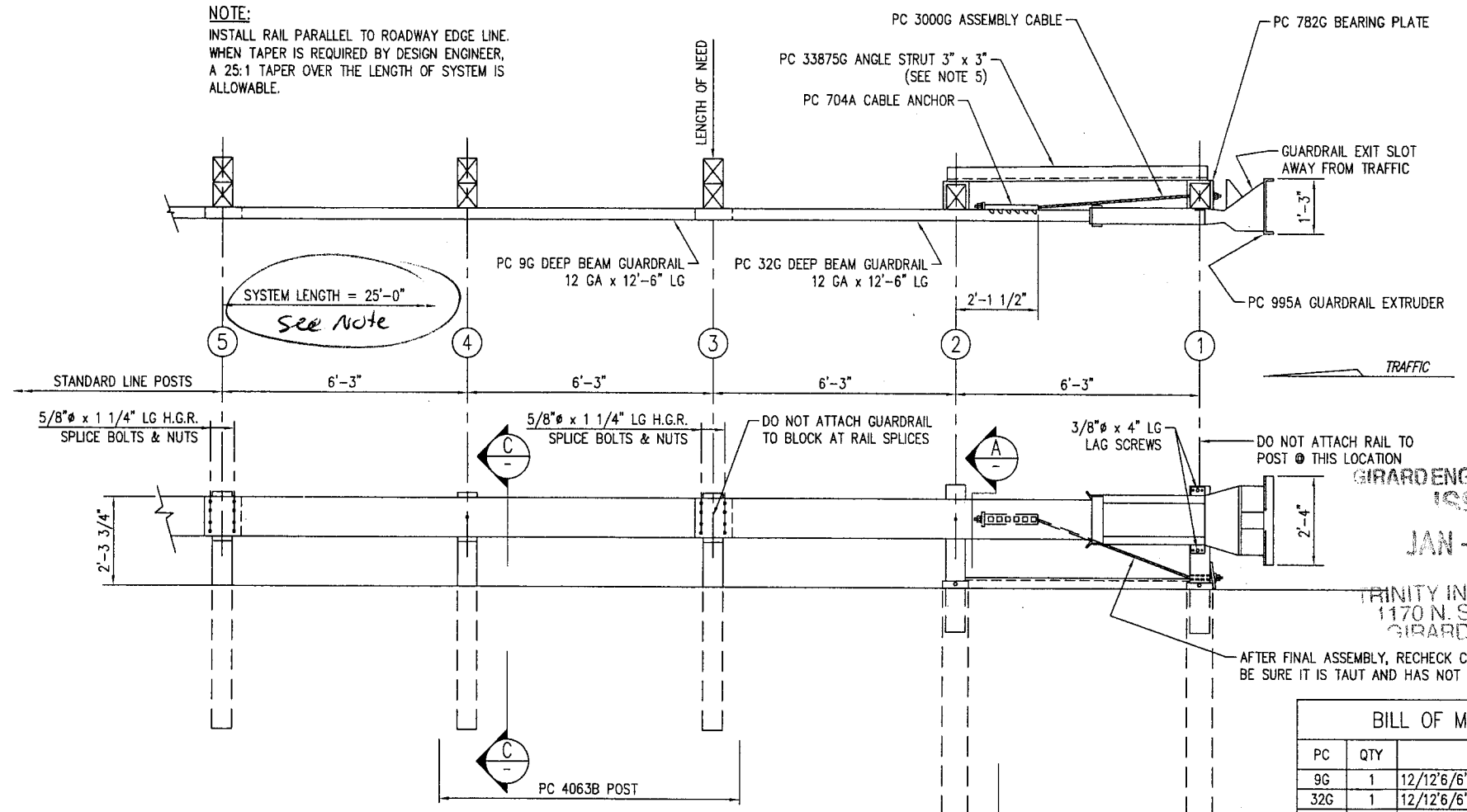

GIRARD ENGINEERING DEPT
ISSUED
JAN - 9 2003

TRINITY INDUSTRIES, INC
1170 N. STATE STREET
GIRARD OHIO 44420

BILL OF MATERIAL

PC	QTY	DESCRIPTION
9G	1	12/12'6/6'3/S (GUARDRAIL)
32G	1	12/12'6/6'3/S ANC (GUARDRAIL)
704A	1	CABLE ANCHOR BRACKET
705G	1	2" x 5 1/2" PIPE
742G	2	6'-0" TUBE SLEEVE
782G	1	5/8" x 8" x 8" BEARING PLATE
995A	1	ET-PLUS EXTRUDER
3000G	1	CABLE 3/4 x 6'6
3300G	3	5/8" WASHER
3340G	19	5/8" HEX NUT
3360G	16	5/8"ø x 1 1/4" SPLICE BOLT
3500G	1	5/8"ø x 10" POST BOLT
3580G	2	5/8"ø x 18" POST BOLT
3700G	4	3/4" WASHER
3704G	2	3/4" HEX NUT
3900G	2	1" WASHER
3910G	2	1" HEX NUT
4063B	2	WD 6'0 POST 6 x 8
4075B	2	WD BLOCK 1'2 x 6 x 8 DR
4147B	2	WD 3'9 POST 5 1/2 x 7 1/2
4228G	2	3/8"ø x 4" LAG SCREW
5148G	2	3/4"ø x 9 1/2" HEX HD BOLT
33875G	1	ANGLE STRUT

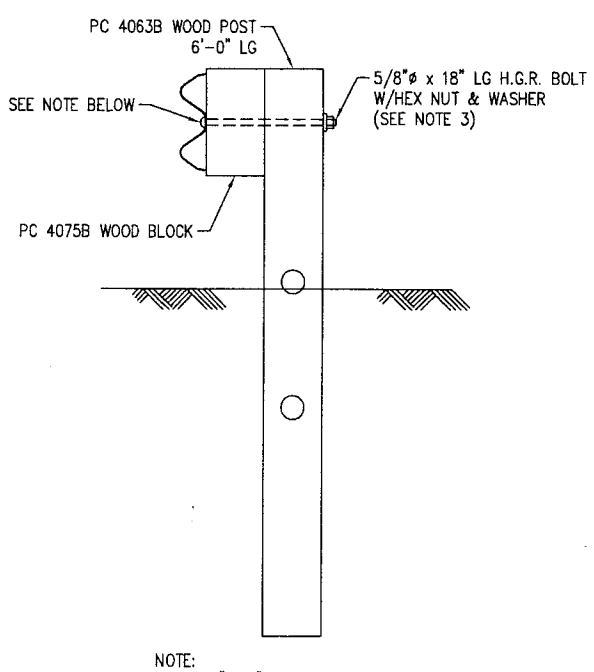

NOTE:
SECTION "C-C" IS SIMILAR @ POST #3 EXCEPT RAIL IS NOT ATTACHED.

SECTION "C-C"
(TYP @ POST #4)

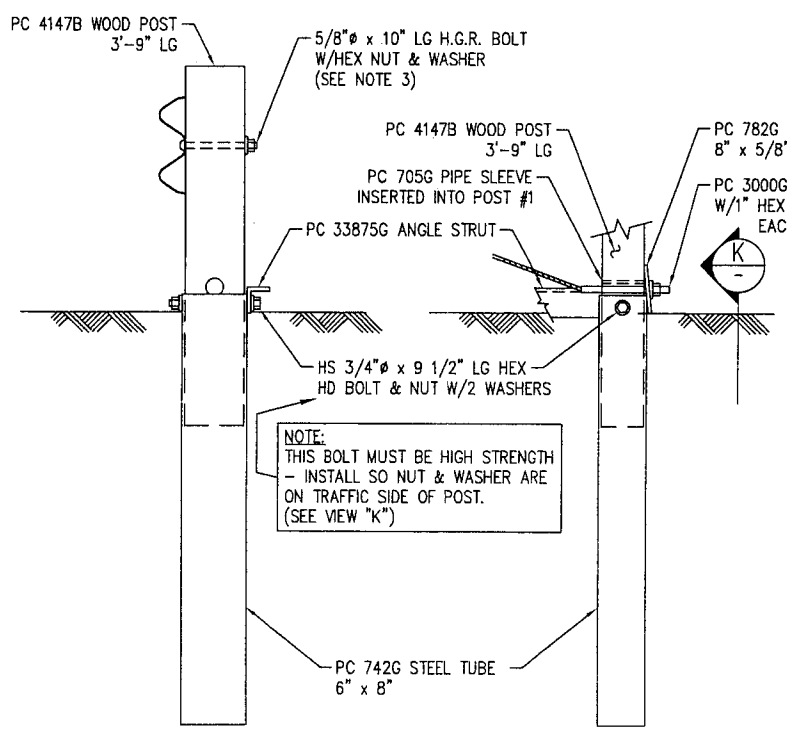

SECTION "A-A"
(@ POST #2)

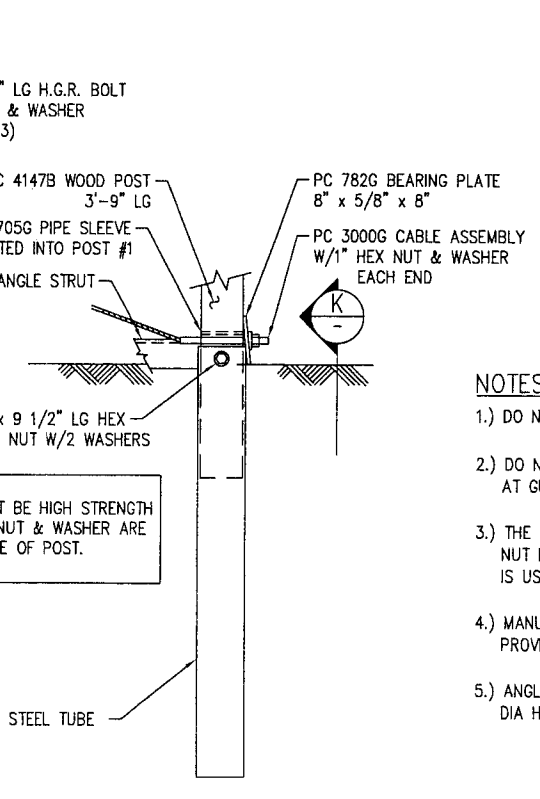

PARTIAL VIEW @ POST #1
(DO NOT ATTACH GUARDRAIL TO POST)

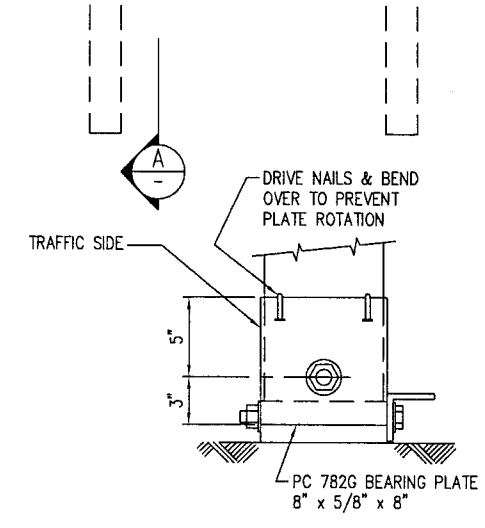

VIEW-"K"
(BEARING PLATE ORIENTATION)

NOTES:

1.) DO NOT ATTACH GUARDRAIL TO POST # 1.

2.) DO NOT ATTACH GUARDRAIL TO POST BLOCKS AT GUARDRAIL LAP SPLICES.

3.) THE 5/8" FLAT WASHER IS USED UNDER THE NUT BEHIND THE POST ONLY. NO WASHER IS USED AT THE RAIL.

4.) MANUFACTURER SUGGESTS CUSTOMER TO PROVIDE REFLECTORIZATION OF TERMINAL.

5.) ANGLE STRUT MUST BE ATTACHED USING 3/4" DIA HIGH STRENGTH BOLTS.

REV.	CHK'D	BY	DATE	REMARKS
2		L.H.	1/08/03	REVISED TITLE BLOCK
1	BT	E.A.S.	10/24/01	UPDATED VIEWS & ADDED VIEW-"K"

ET-PLUS

ET-PLUS 25'-0"
PLAN, ELEVATION & SECTION
WITH 12'-6" RAILS & 2 POST SLEEVES
HBA STRUT, NCHRP 350 TL 2

TRINITY INDUSTRIES, INC.
HIGHWAY SAFETY PRODUCTS
2525 STEMMONS FREEWAY, DALLAS, TX 75207

DRAWN	BT
CHECKED	
SCALE	N.T.S.
DATE	09/25/01
ENG. FILE #	SS335-01E
SHT.No.	E1 OF 1
DRAWING NO.	SS-335
REV.	2

This drawing and the information shown thereon is the sole property of TRINITY INDUSTRIES, INC. Neither the drawing nor such information is to be used for any purpose other than that for which it was specifically furnished by TRINITY INDUSTRIES, INC., nor is any reproduction authorized without written permission.