NOTE:
INSTALL RAIL PARALLEL TO ROADWAY EDGE LINE. WHEN TAPER IS REQUIRED BY DESIGN ENGINEER, A 50:1 TAPER OVER THE 50' LENGTH OF SYSTEM IS ALLOWABLE.

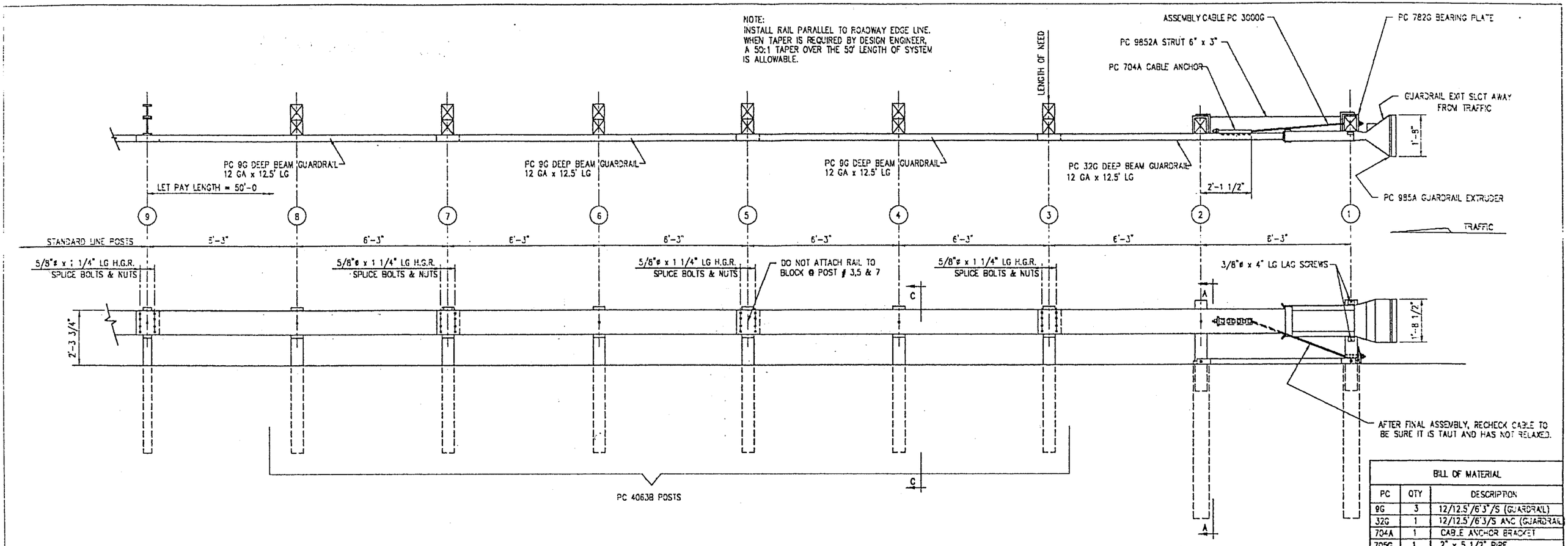

NOTES:
1.) THE 5/8" FLAT WASHER IS USED UNDER THE NUT, BEHIND THE POST ONLY. NO WASHER IS USED AT THE RAIL.
2.) MANUFACTURER SUGGESTS CUSTOMER TO PROVIDE REFLECTORIZATION OF TERMINAL.

BILL OF MATERIAL

PC	QTY	DESCRIPTION
9G	3	12/12.5'/6'3"/S (GUARDRAIL)
32G	1	12/12.5'/6'3/S ANC (GUARDRAIL)
704A	1	CABLE ANCHOR BRACKET
705G	1	2" x 5 1/2" PIPE
732G	2	6'6 TUBE SLEEVE
782G	1	5/8" x 8" x 8" BEARING PLATE
985A	1	ET-2000 EXTRUDER
3000G	1	CABLE 3/4 x 6'6
3300G	11	5/8" WASHER
3340G	45	5/8" HEX NUT
3360G	32	5/8"ø x 1 1/4" SPLICE BOLT
3478G	4	5/8"ø x 7 1/2" HEX HD BOLT
3497G	2	5/8"ø x 9 1/2" HEX HD BOLT
3500G	1	5/8"ø x 10" POST BOLT
3580G	6	5/8"ø x 18" POST BOLT
3900G	2	1" WASHER
3910G	2	1" HEX NUT
4063B	6	WD 6'0 POST 6 x 8
4075B	6	WD BLOCK 1'2 x 6 x 8 DR
4147B	2	WD 3'9 POST 5 1/2 x 7 1/2
4228G	2	3/8"ø x 4" LAG SCREW
9852A	1	STRUT & YOKE

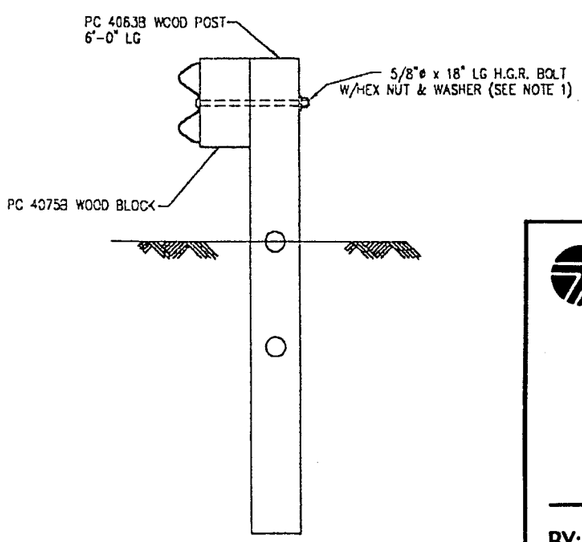

NOTE:
SECTION "C-C" IS SIMILAR @ POST #3,5 & 7 EXCEPT RAIL IS NOT ATTACHED.

SECTION "C-C"
(TYP @ POSTS #4, 6, & 8)

WASHINGTON STATE DEPARTMENT OF TRANSPORTATION

☒ Approved
☐ Approved with revision
☐ Rejected

BY: Richard B Walker
DATE: 11/22/99

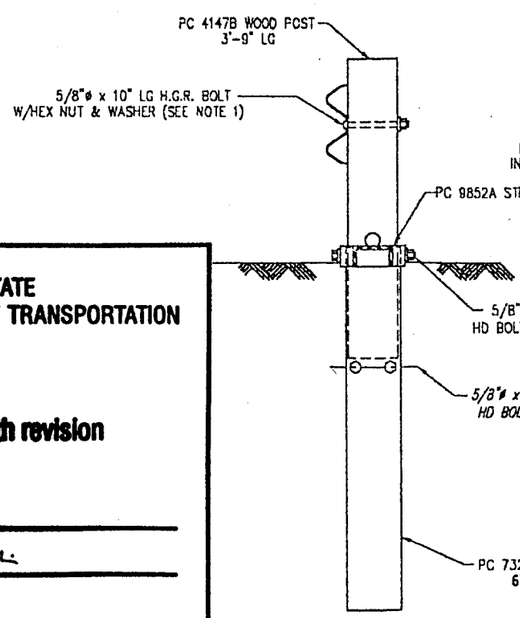

SECTION "A-A"
(@ POST #2)

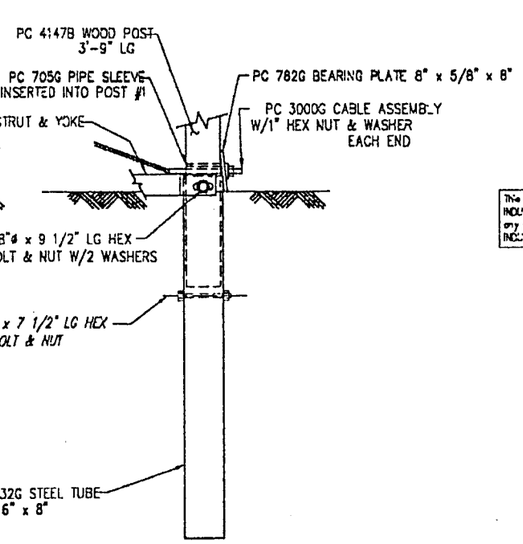

PARTIAL VIEW @ POST #1

This drawing and the information shown thereon is the sole property of TRINITY INDUSTRIES, INC. Neither the drawing nor such information is to be used for any purpose other than that for which it was specifically furnished by TRINITY INDUSTRIES, INC., nor is any reproduction authorized without written permission.

REV.	CHK'D	BY	DATE	REMARKS

SYRO

ET2000-LET

ET2000 50'-0" LET - 12'-6" PANELS
PLAN, ELEVATION & SECTIONS

CUSTOMER | P.O. No.

DRAWN	Dipak Dhami
CHECKED	Robert Tekach
APPROVED	
DATE	10/13/98
ENG. FILE #	SS269
SHT.No.	E1 OF 1
DRAWING No.	SS 269
REV.	0

TRINITY INDUSTRIES, INC.
DALLAS, TX CENTERVILLE, UT | GRAND, OH LIMA, OH | FORT WORTH, TX ELIZABETHTOWN, KY