When locating crosswalks at intersections, consider the visibility of the pedestrian from the motorist's point of view. Shrubbery, signs, parked cars, and other roadside appurtenances can block the motorist's view of the pedestrian. Figures 1025-6a and 6b illustrate these sight distance problems.

In urban areas where vehicle speeds are in the range of 25 to 35 mph, a sidewalk bulb out is sometimes used to place the pedestrian at a more visible location. The bulb out also shortens the length of the pedestrian crossing and reduces the pedestrian's exposure time. At intersections with traffic signals, the bulb out can be used to reduce both pedestrian signal timing and the mast arm lengths of the signal supports. Examples of sidewalk bulb outs are shown in the Figure 1025-7. The right turn path of the design vehicle or the vehicle most likely to make this turn is a critical element in determining the size and shape of the bulb out. Sidewalk bulb outs tend to restrict the width of the roadway and can make right turns difficult for extremely long trucks. Any proposal to install bulb outs on state highways is a deviation that requires approval and documentation.

On roadways with two-way left-turn lanes with pedestrian crossing traffic caused by nearby pedestrian generators, consider removing a portion of the turn lane and installing a raised median refuge and a midblock pedestrian crossing. The installation of a midblock pedestrian crossing on a state highway, however, is a design deviation that requires approval and documentation. An example of a midblock crossing is shown in Figure 1025-8.

An engineering study is required when considering a midblock pedestrian crossing on a state highway. Conditions that might favor a midblock crossing are:

- Significant pedestrian crossings and substantial pedestrian and vehicle conflicts occur.
- The proposed crossing can concentrate or channel multiple pedestrian crossings to a single location.
- The crossing is at an approved school crossing on a school walk route.
- The adjacent land use creates high concentrations of pedestrians needing to cross the highway.
- The pedestrians fail to recognize the best or safest place to cross along a highway and there is a need to delineate the optimal location.
- There is adequate sight distance for motorists and pedestrians.

Midblock pedestrian crossings on state highways are not desirable at the following locations:

- Immediately downstream (less than 300 ft) from a traffic signal or bus stop where motorists do not expect a pedestrian to cross.
- Within 600 ft of another pedestrian crossing.
- On high speed roadways as noted in Figure 1025-4.
- Where pedestrians must cross three or more lanes of traffic in the same direction.

The minimum width of a raised median refuge area is 6 ft to accommodate people in wheelchairs. Raised medians are usually too narrow to allow the installation of ramps and a level landing. When the median is 16 ft or less in width, provide a passageway through the median. This passageway connects with the two separate roadways and cannot exceed a grade of 5%.

(4) Sidewalk Ramps

Sidewalk ramps are required at all legal crossing. These ramps provide an easily accessible connection from a raised sidewalk down to the roadway surface. To comply with ADA requirements, these ramps are at least three feet wide and have slopes 12H:1V or flatter. Examples of sidewalk ramps are shown in the Standard Plans and the *Sidewalk Details* guide.

The lower terminus of the sidewalk ramp is always located at the beginning of a marked or unmarked crosswalk when separate ramps are used for each direction. Diagonal ramps are used at the junction of two crosswalks. A separate sidewalk ramp is preferred for each

crossing because the crossing distance is shorter and people with vision impairments have fewer difficulties with this arrangement. Diagonal ramps are sometimes necessary when altering an existing roadway because of right of way constraints.

Surface water runoff from the roadway can flood the lower end of a sidewalk ramp. Determine the grades along the curb line and provide catch basins or inlets to prevent the flooding of the ramps. Figure 1025-9 shows examples of how drainage structures are located. Verify that the drainage structure will not be in the path of a wheelchair user.

A level landing is necessary at the top of a sidewalk ramp. This landing is provided to allow a person in a wheelchair room to maneuver into a position to use the ramp or to bypass it. In alterations of existing roadways, the landings must be at least three feet square. In new construction, a four-foot square landing is required. When right of way constraints are not an issue, provide a larger five-foot square landing. If the landing is next to a vertical wall, a five-foot wide clear area is desirable to allow a person in a wheelchair more room to maneuver. Examples of these wheelchair maneuvers are shown in the *Sidewalk Details* guide. When the upper area of a sidewalk ramp is adjacent to a vertical wall, a 5 ft clearance from the edge of the ramp to the wall is desirable.

At signalized intersections, the pedestrian push buttons are located near the sidewalk ramps for ADA accessibility. See Chapter 850, "Traffic Control Signals," for information on pedestrian requirements at traffic signal locations.

(5) Pedestrian Grade Separations

In areas where heavy pedestrian traffic is present and opportunities to cross the roadway are infrequent, consider providing a pedestrian grade separation. When considering a pedestrian structure, determine if the conditions that require the crossing are permanent. If there is a likelihood that the pedestrian activity generator might not exist in the near future, consider less costly solutions. Locate the grade separated crossing where pedestrians are most likely to cross the roadway. A crossing might not be used if the pedestrian is required to deviate significantly from a more direct route. A structure might be under-utilized if the additional average walking distance for 85 percent of the pedestrians exceeds 1/4 mile. It is sometimes necessary to install fencing or other physical barriers to channel the pedestrians to the structure and reduce the possibility of undesired at-grade crossings. Pedestrian grade separations are more effective when the roadway is below the natural ground line as in a "cut" section. Elevated grade separations, where the pedestrian is required to climb stairs or use long approach ramps, tend to be under-utilized.

Grade separated structures are proposed during the planning stage of a project because of the high costs associated with their design and construction. Consider grade-separated crossings under the following conditions:

- Where there is moderate to high pedestrian demand to cross a freeway or expressway
- Where there is a large number of young children, particularly on schools routes, who regularly cross a high speed or high volume roadway
- On streets with high vehicular volumes and high pedestrian crossing volumes, and crossings are extremely hazardous for pedestrians

The Headquarters (HQ) Bridge and Structures Office designs pedestrian grade separation bridges and tunnels on a project-by-project basis. Railings 3 ft 6 in high are provided on pedestrian bridges. The bridge rail is designed so that a 6-inch sphere cannot pass through any part of the railing. In addition, a 2 ft 6 in to 2 ft 10 in high handrail is provided for grades greater than 5%. The minimum width between the railings of an overhead structure or the vertical walls of a tunnel is 8 ft. The minimum overhead clearance for a tunnel is 10 ft. Protective screening to prevent objects from being thrown from an overhead pedestrian structure is sometimes necessary. See Chapter 1120, "Bridges."

The minimum vertical clearance from the bottom of the pedestrian structure to the roadway beneath is 17 ft 6 in. This minimum height requirement can affect the length of the pedestrian ramps to the structure. To comply with ADA requirements, a ramp cannot have a grade exceeding 8.33% and the maximum rise of the ramp cannot exceed 2 ft 6 in without landings. Landings are a minimum of 5 ft wide and 5 ft long except the landing at the bottom of the ramp, which is 6 ft in length. When ramps are not feasible, provide both elevators and stairways. Stairways are designed in accordance with the Standard Plans.

Pedestrian tunnels are an effective method for providing crossings for roadways located in embankment sections. When possible, design the tunnel with a nearly level profile to provide complete vision from portal to portal. Pedestrians are reluctant to enter a tunnel with a depressed profile because they are unable to see if the tunnel is occupied. Police officers also have difficulty patrolling depressed profile tunnels. Provide day and nighttime illumination within the pedestrian tunnel. Installing gloss-finished tile walls and ceilings can also enhance light levels within the tunnel.

(6) Transit and School Bus Stops

The location of transit stops is an important consideration in providing appropriate pedestrian facilities. See Chapter 1060, "Transit Benefit Facilities." A transit stop on one side of a street usually has a counterpart on the opposite side because transit routes normally function in both directions on the same roadway. When passengers use this type of route, they will either cross the street at the beginning of a trip or the end of the return trip. Pedestrian collisions are more frequent at these locations. When analyzing high pedestrian accident locations, consider the presence of nearby transit stops and the opportunities for a pedestrian to safely cross the street. At-grade midblock pedestrian crossings are effective at transit stop locations on roadways with lower vehicular volumes. Pedestrian grade separations are appropriate at midblock locations when vehicular traffic volumes prohibit pedestrian crossings at grade.

School bus stops are typically adjacent to sidewalks in urban areas and along shoulders in rural areas. Determine the number of children using the stop and provide an appropriate waiting area. Children, because of their smaller size, might be difficult for motorists to see at crossings or stops. Determine if utility poles, vegetation, and other roadside features interfere with the motorist's ability to see the children. When necessary, relocate the obstructions or move the bus stop. Parked vehicles can also block visibility and parking prohibitions might be necessary near the bus stop.

(7) Illumination and Signing

In Washington State, the highest number of collisions between vehicles and pedestrians occur in the months November through February when there is poor visibility and fewer daylight hours. At high pedestrian accident locations, illumination of pedestrian crossings and other walkways is an important design consideration. Illumination provided solely for vehicular traffic is not always effective in lighting parallel walkways for pedestrians. Consider additional lighting, mounted at a lower level, for walkways with considerable nighttime pedestrian activity. Design guidance for illumination is in Chapter 840. See Chapter 820 and the MUTCD for pedestrian related signing.

1025.08 Documentation

A list of documents that are to be preserved [in the Design Documentation Package (DDP) or the Project File (PF)] is on the following website: http://www.wsdot.wa.gov/eesc/design/projectdev/

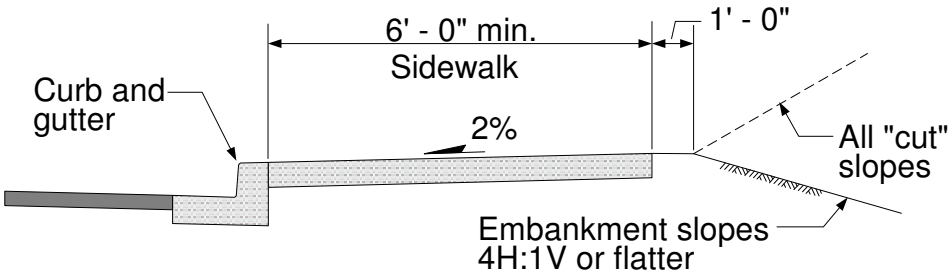

Case A

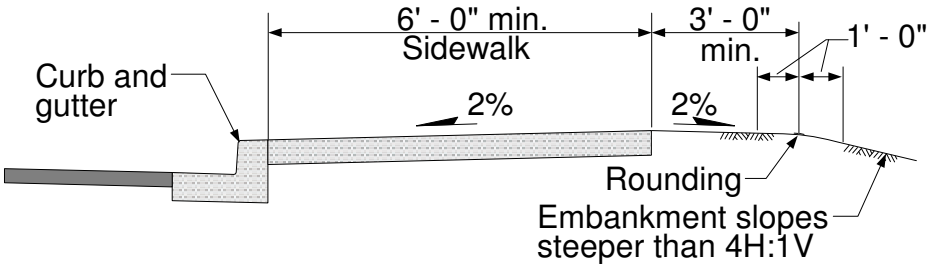

Case B

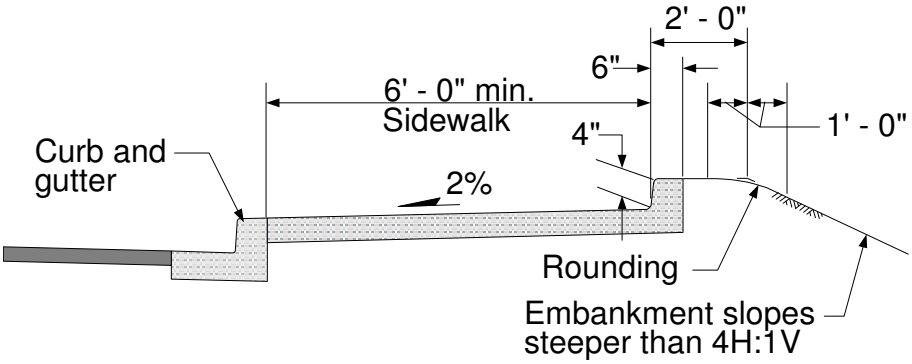

Case C

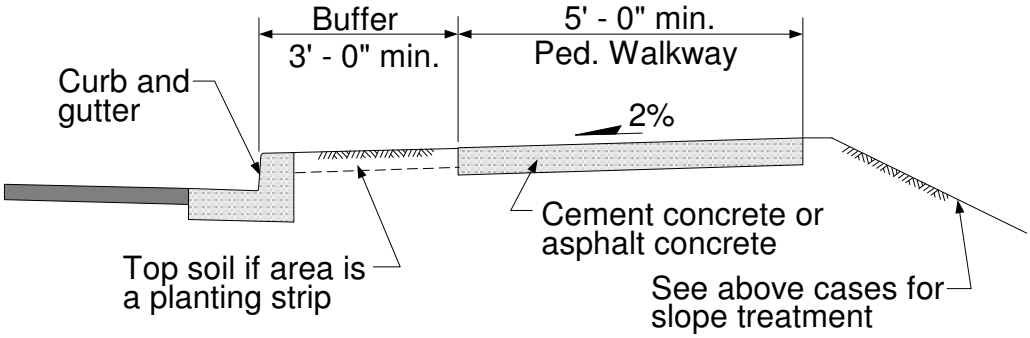

Case D

Pedestrian Walkways
Figure 1025-2a

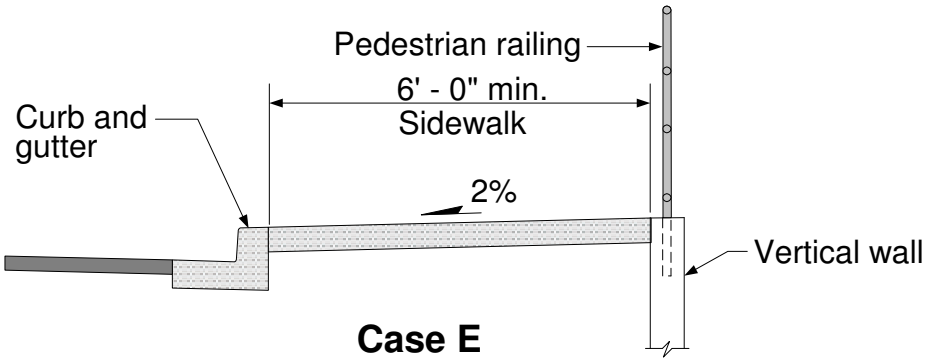

Case E

When the wall is outside of the Design Clear Zone

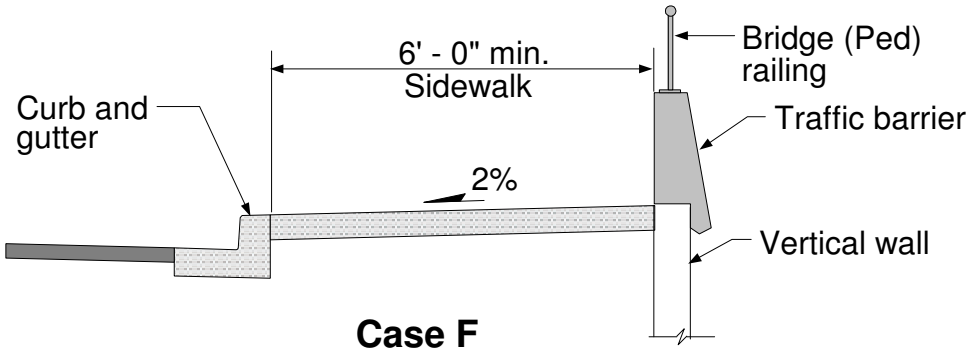

Case F

When the wall is within the Design Clear Zone

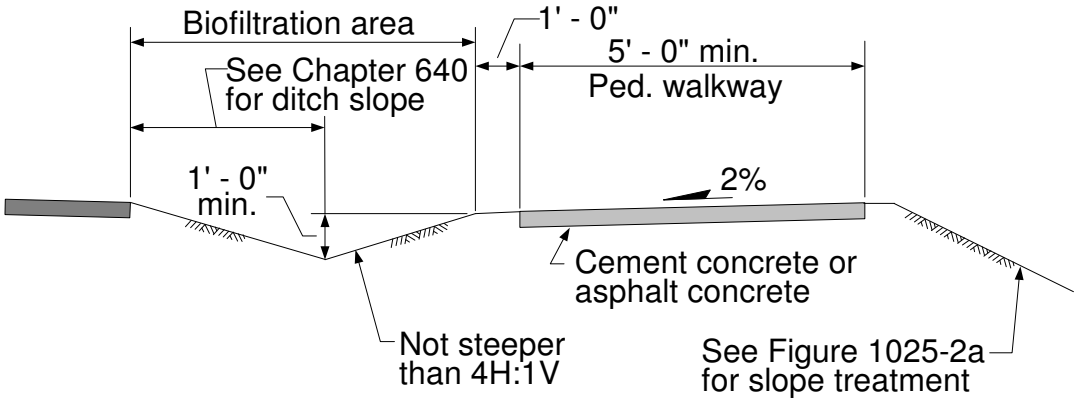

Case G

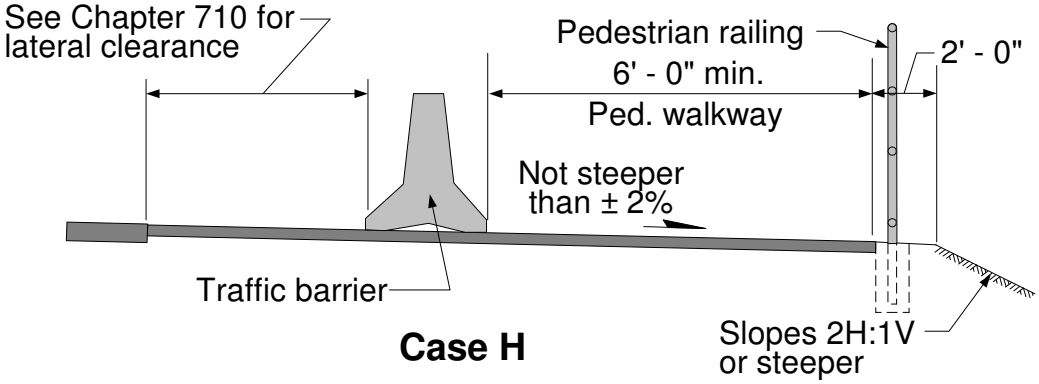

Case H

Pedestrian Walkways

Figure 1025-2b

Roadway classification & land use	Sidewalk recommendations
Rural highways (less than one dwelling unit per acre)	No sidewalk recommended. Shoulder (four feet minimum width) adequate.
Suburban highways (one or less dwelling units per acre)	Sidewalk on one side desirable. Four feet wide shoulders adequate.
Suburban highway (2 to 4 dwelling units per acre)	Sidewalks on both sides of roadway desirable. Sidewalk on one side recommended.
Major arterial in residential area	Sidewalks on both sides of roadway recommended.
Collector or minor arterial in residential area	Sidewalks on both sides of roadway recommended.
Local street in residential area with less than 1 dwelling unit per acre	Sidewalk on one side desirable. Four feet wide shoulders adequate.
Local street in residential area with 1 to 4 dwelling units per acre	Sidewalks on both sides of roadway desirable. Sidewalk on one side recommended.
Local street in residential area with more than 4 dwelling units per acre	Sidewalks on both sides of roadway recommended.
Streets in commercial area	Sidewalks on both sides of roadway recommended
Streets in industrial area	Sidewalks on both sides of roadway desirable. Sidewalk on one side recommended.

Sidewalk Recommendations
Figure 1025-3