DRAWN BY: MONIQUE GLICK

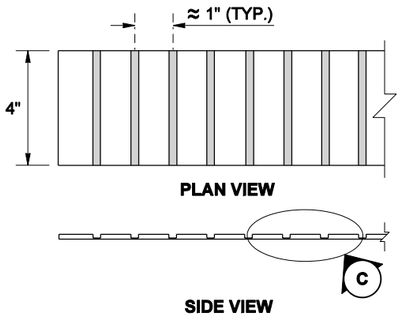

EMBOSSED PLASTIC LINE

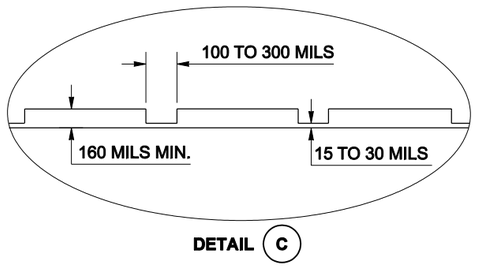

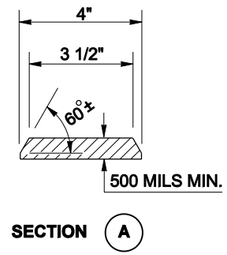

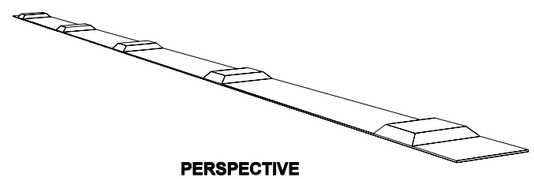

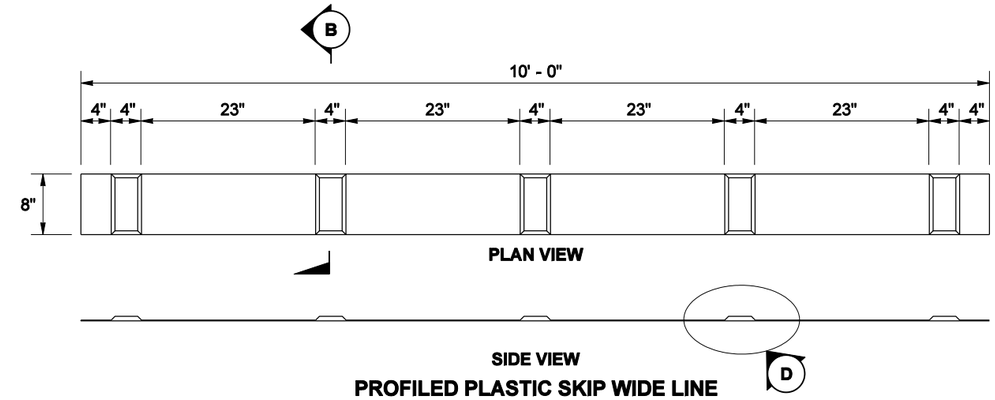

PROFILED PLASTIC SKIP WIDE LINE

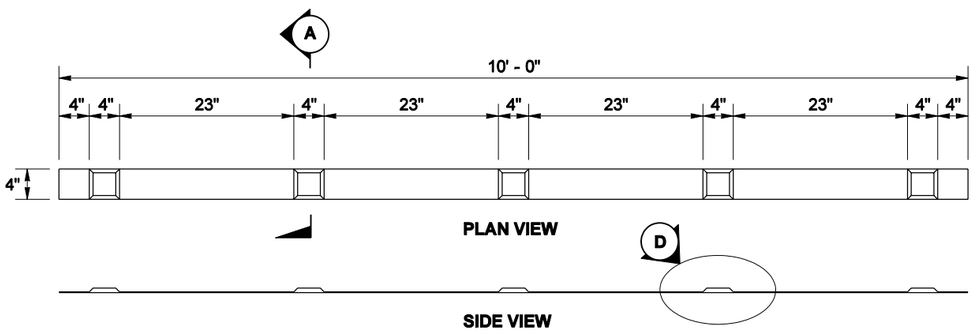

PROFILED PLASTIC LINE

SEE NOTE

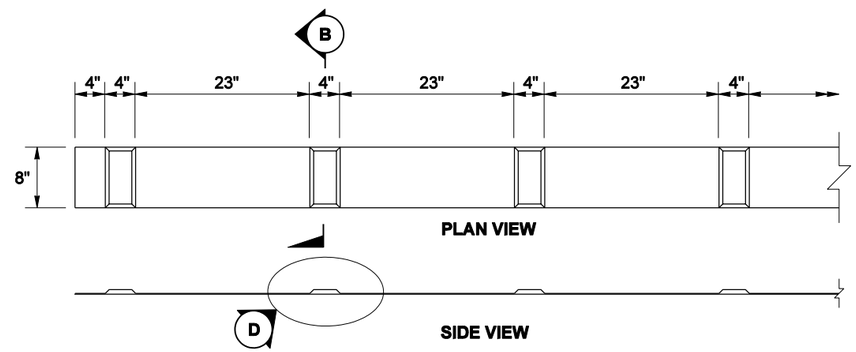

PROFILED PLASTIC WIDE LINE

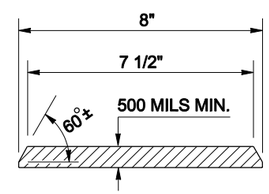

SECTION B

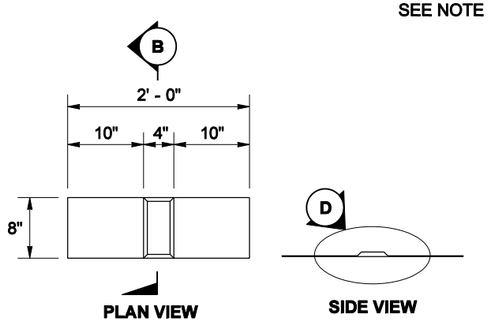

PROFILED PLASTIC DOTTED WIDE LINE

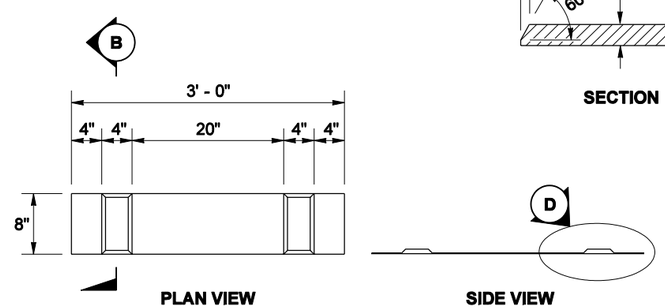

PROFILED PLASTIC DROP LANE LINE

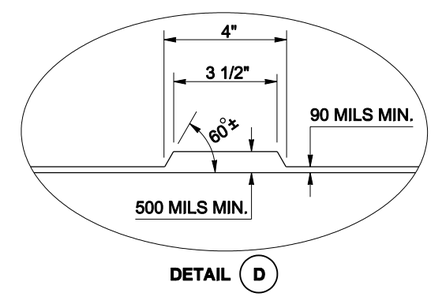

NOTE

For Longitudinal Lines use the PROFILED PLASTIC LINE in a continuous pattern.

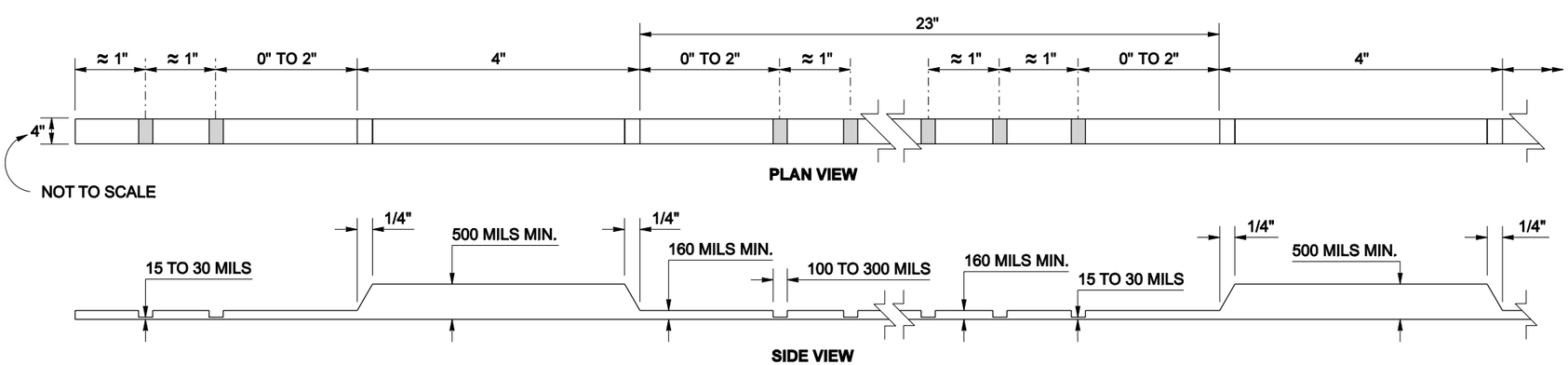

PROFILED EMBOSSED PLASTIC LINE

PROFILED PLASTIC LINES

STANDARD PLAN M-20.20-00

SHEET 1 OF 1 SHEET

APPROVED FOR PUBLICATION

Harold J. Peterfeso — STATE DESIGN ENGINEER

03-04-05 — DATE

Washington State Department of Transportation

NOTE: THIS PLAN IS NOT A LEGAL ENGINEERING DOCUMENT BUT AN ELECTRONIC DUPLICATE. THE ORIGINAL, SIGNED BY THE ENGINEER AND APPROVED FOR PUBLICATION, IS KEPT ON FILE AT THE WASHINGTON STATE DEPARTMENT OF TRANSPORTATION. A COPY MAY BE OBTAINED UPON REQUEST.