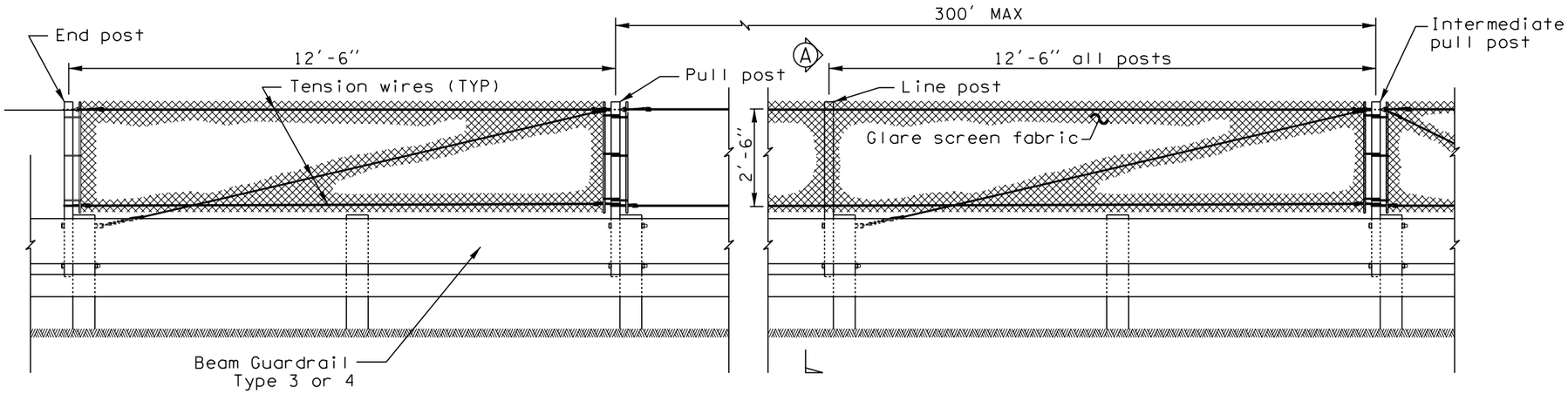

DESIGN A

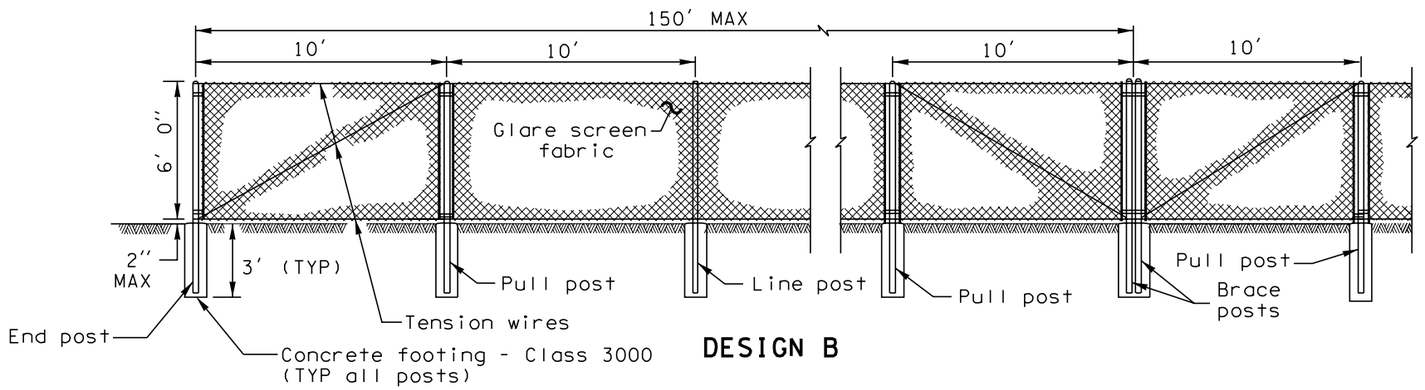

DESIGN B

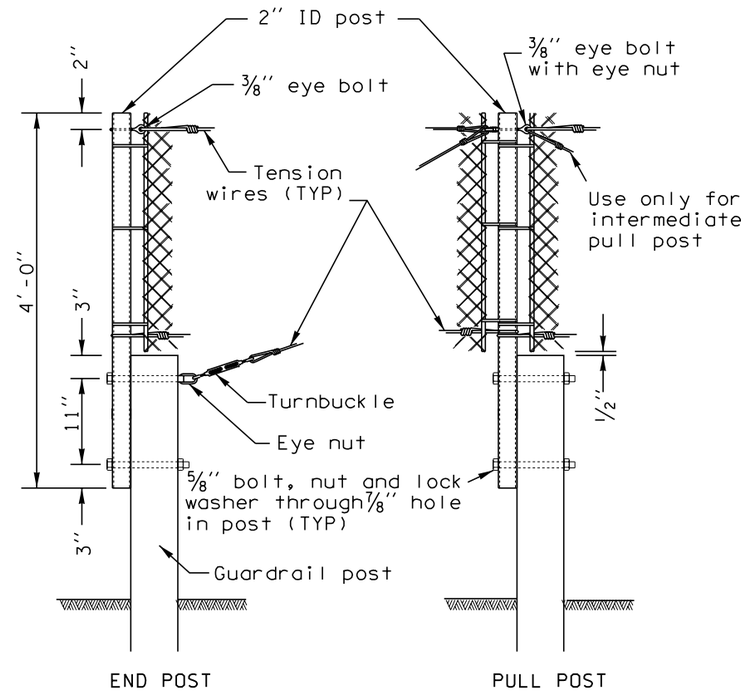

DESIGN A DETAILS

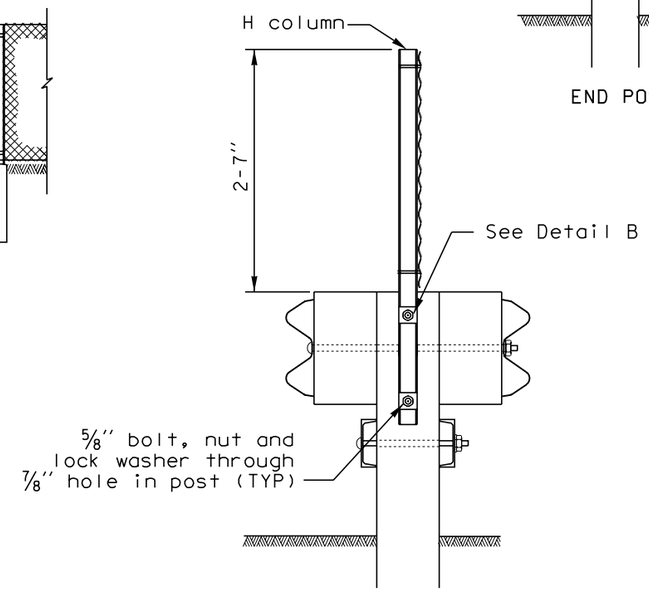

SECTION A

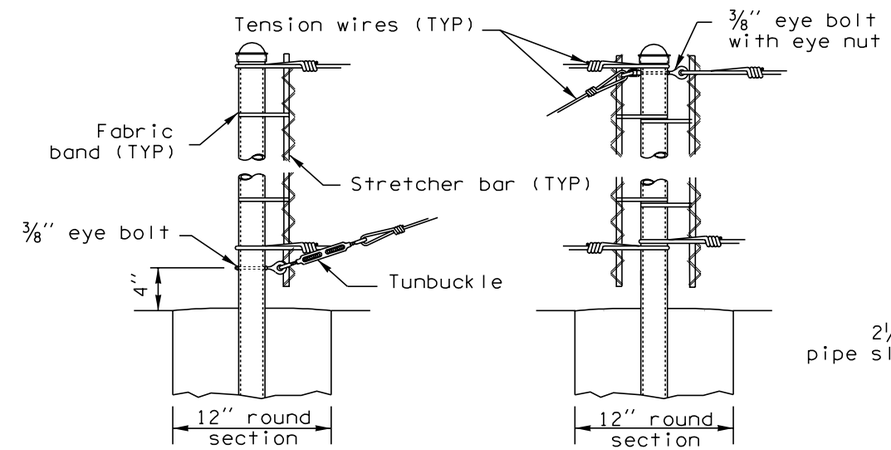

END POST PULL POST

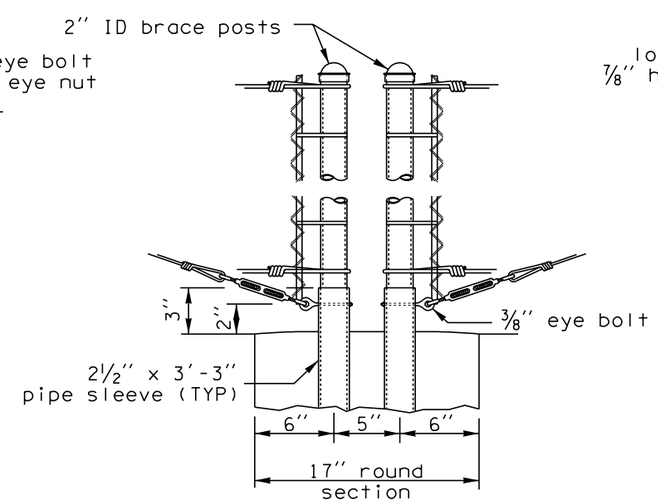

BRACE POST DETAILS

DESIGN B DETAILS

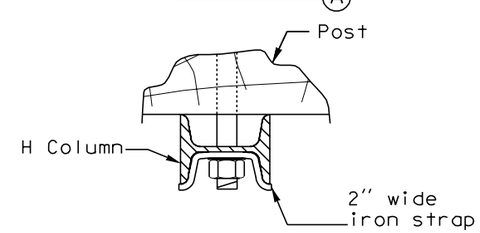

DETAIL B

EXPIRES MAY 3, 2000

GLARE SCREEN TYPE 1

STANDARD PLAN L-5

NOTE: THIS PLAN IS NOT A LEGAL ENGINEERING DOCUMENT BUT AN ELECTRONIC DUPLICATE. THE ORIGINAL, SIGNED BY THE ENGINEER AND APPROVED FOR PUBLICATION, IS KEPT ON FILE AT THE WASHINGTON STATE DEPARTMENT OF TRANSPORTATION. A COPY MAY BE OBTAINED UPON REQUEST.

APPROVED FOR PUBLICATION

Clifford E. Mansfield 7/31/98

DEPUTY STATE DESIGN ENGINEER DATE

WASHINGTON STATE DEPARTMENT OF TRANSPORTATION
OLYMPIA, WASHINGTON