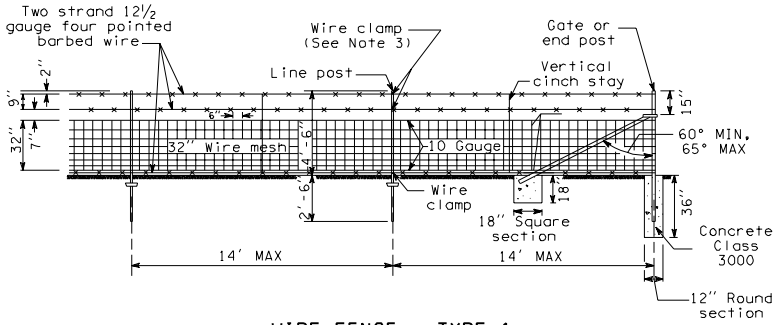

WIRE FENCE - TYPE 1

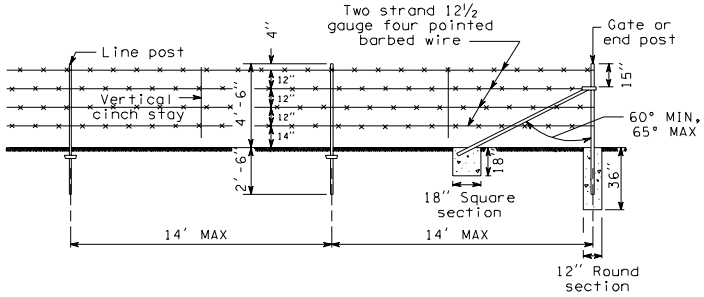

WIRE FENCE - TYPE 2

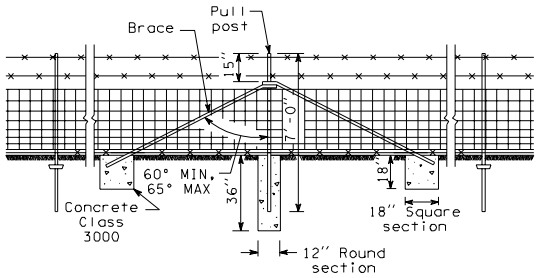

LINE BRACE
(Maximum spacing 1000 feet)

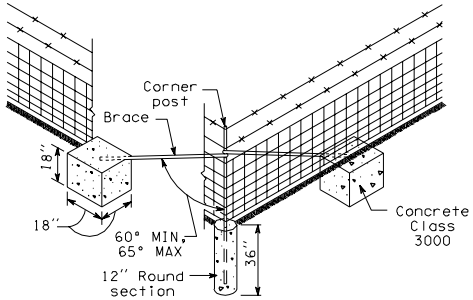

CORNER BRACE
(Angles 30° and over)

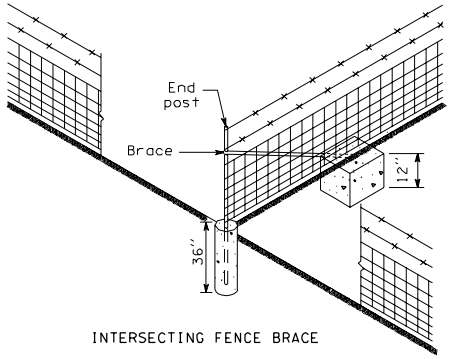

INTERSECTING FENCE BRACE

WIRE FENCE

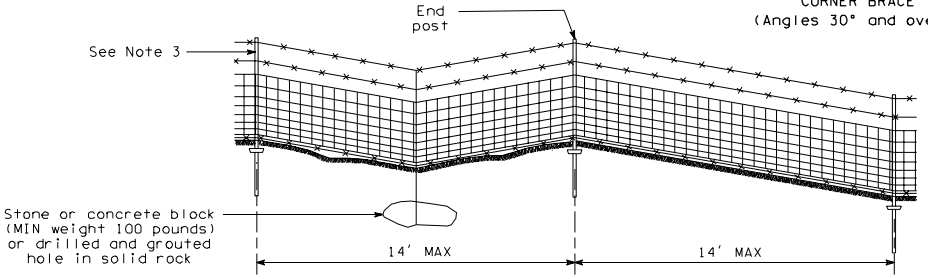

TREATMENT OF SAGS

STEEL POST DETAILS

Details for Type 2 Fence identical as shown for Type 1 Fence

L-1

07-18-97

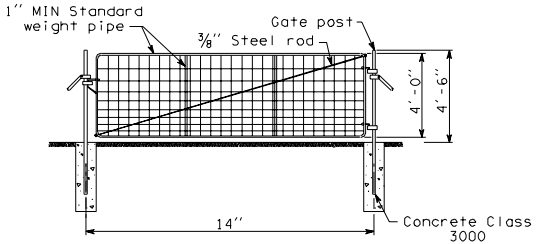

SINGLE WIRE GATE, 14' WIDE

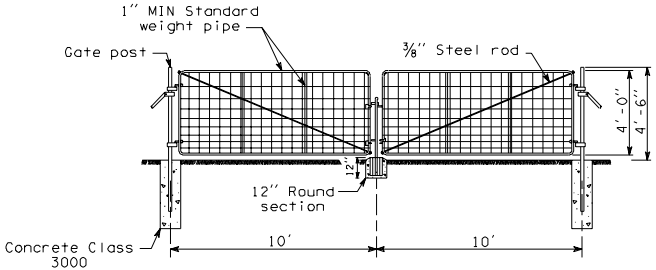

DOUBLE WIRE GATE, 20' WIDE

NOTES:

1. Details for Type 2 Fence, sme as Type 1.
2. Wood anchors shall be 2x4 lumber, 12" long MIN, fastened with three 16d galvanized nails.
3. Four wire clamps per post required for mesh wire. Three additional clamps per post required in sag section.

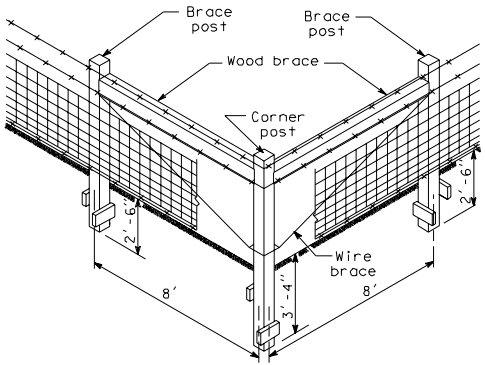

CORNER BRACE
(Angles 30° and over)

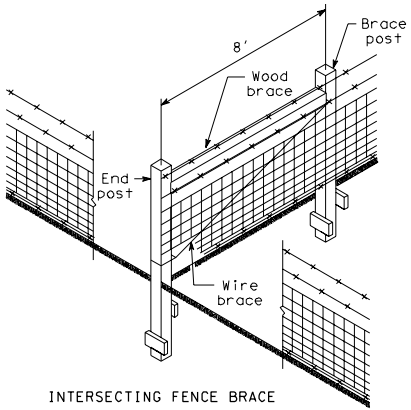

INTERSECTING FENCE BRACE

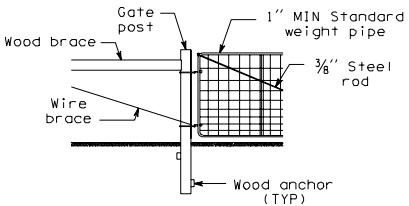

GATE POST

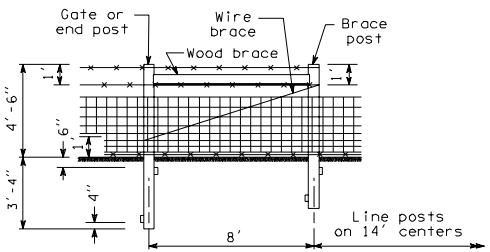

END BRACE

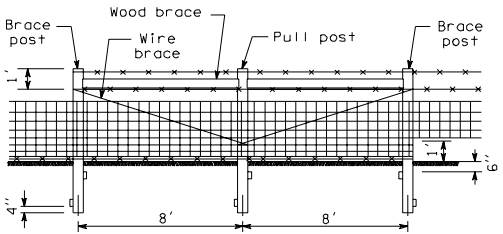

LINE BRACE
(Maximum spacing 1000 feet)

WIRE FENCE

WOOD POST DETAILS

L-1

07-18-97