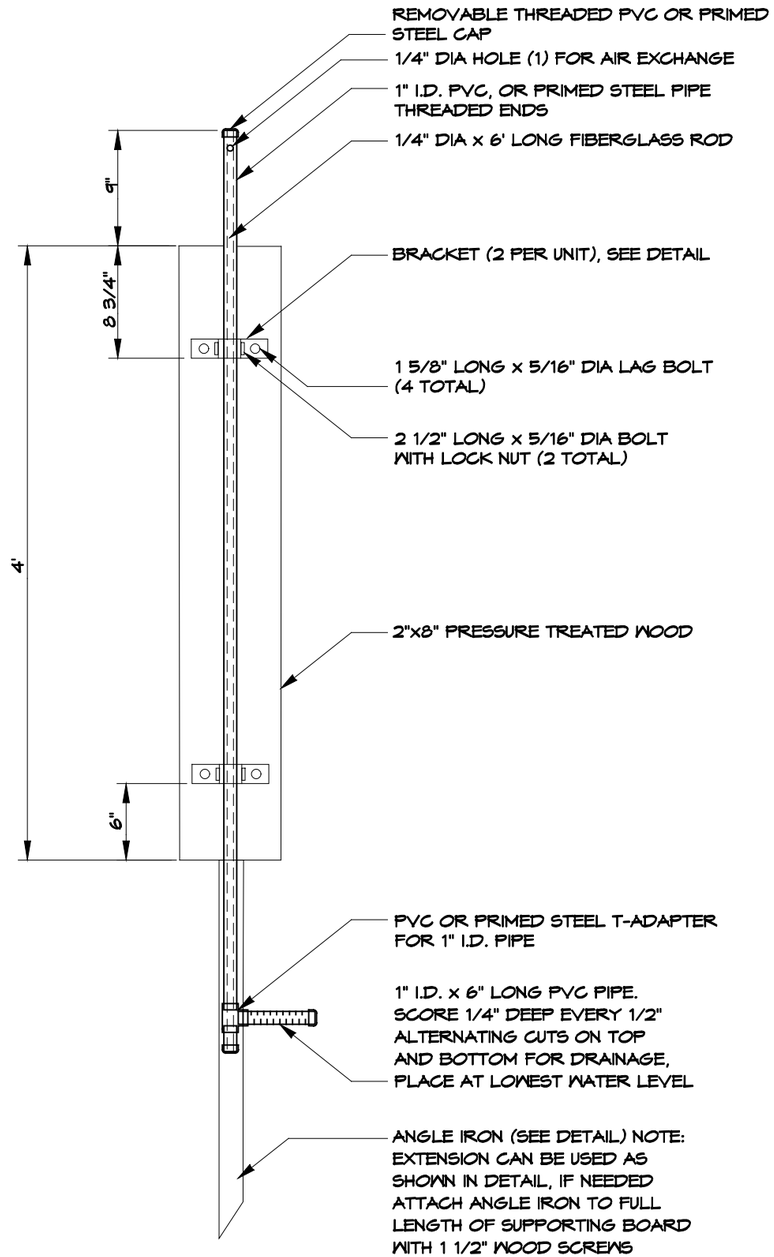

CREST GAGE
NOT TO SCALE

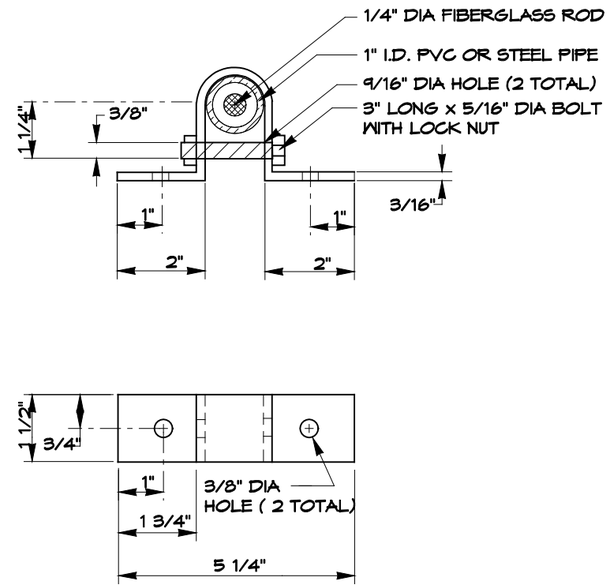

BRACKET (2 PER UNIT)
NOT TO SCALE

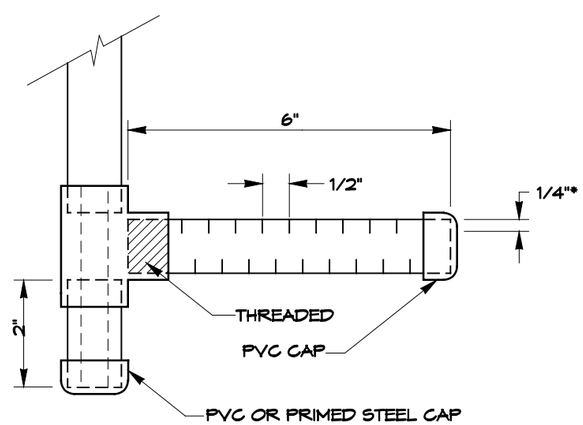

* REFERS TO DRAINAGE CUTS ON TOP AND BOTTOM OF PIPE

WATER INTAKE & CLEAN-OUT ASSEMBLY
NOT TO SCALE

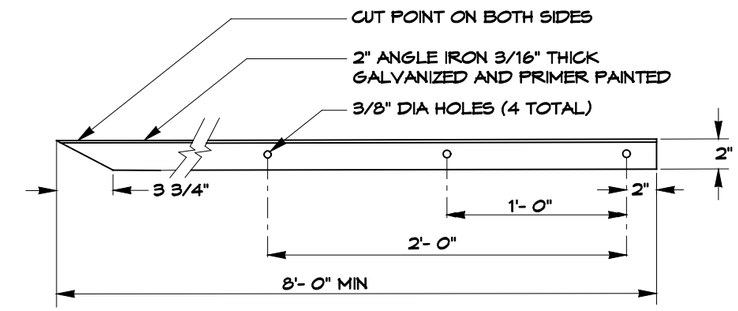

ANGLE IRON
NOT TO SCALE

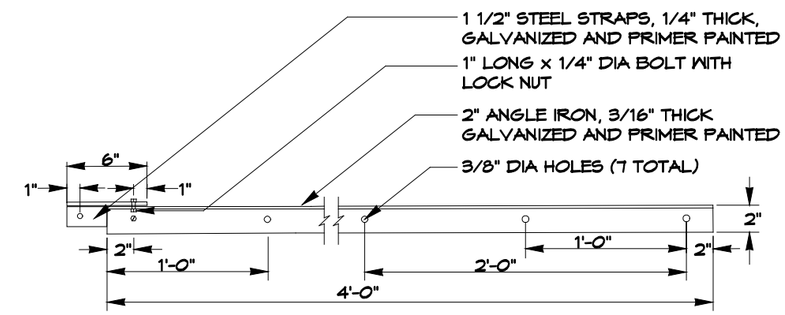

ANGLE IRON EXTENSION
NOT TO SCALE

NOTE: POUR IN APPROXIMATELY 1 TABLESPOON OF CORK DUST AT INSTALLATION AND AFTER EACH READING

NOTE: GAGE ASSEMBLY BACKING BOARD, PIPE, ROD, AND ANGLE IRON CAN BE EXTENDED AS NEEDED TO FIT SITE REQUIREMENTS.

STATE OF WASHINGTON REGISTERED LANDSCAPE ARCHITECT

MARK W. MAURER
CERTIFICATE NO. 000598

CREST GAGE

STANDARD PLAN I-2

NOTE: THIS PLAN IS NOT A LEGAL ENGINEERING DOCUMENT BUT AN ELECTRONIC DUPLICATE. THE ORIGINAL, SIGNED BY THE ENGINEER AND APPROVED FOR PUBLICATION, IS KEPT ON FILE AT THE WASHINGTON STATE DEPARTMENT OF TRANSPORTATION. A COPY MAY BE OBTAINED UPON REQUEST.

APPROVED FOR PUBLICATION

Clifford E. Mansfield — *04-23-99*

DEPUTY STATE DESIGN ENGINEER — DATE

WASHINGTON STATE DEPARTMENT OF TRANSPORTATION
OLYMPIA, WASHINGTON