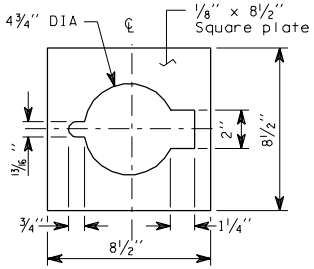

COVER PLATE

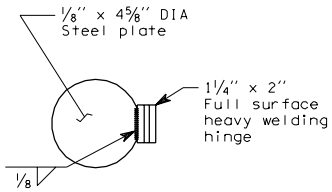

CAP AND HINGE

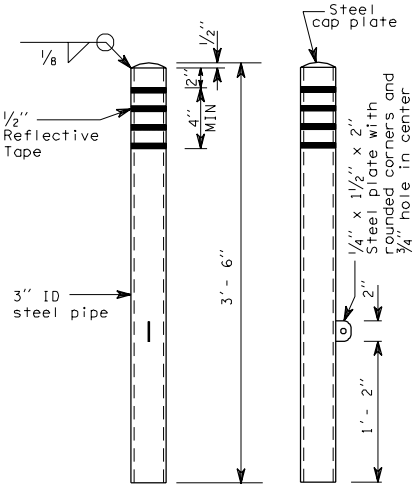

FRONT VIEW

SIDE VIEW

POST

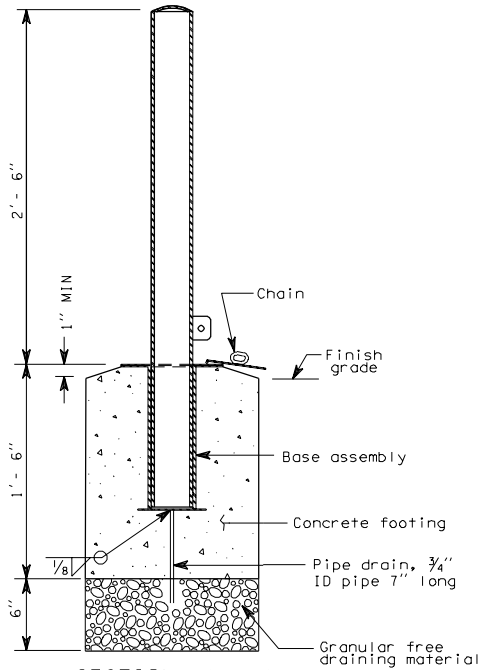

SECTION A - A

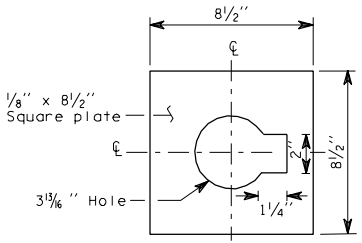

TOP PLATE

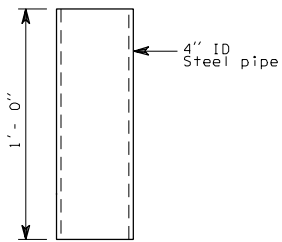

PIPE SLEEVE

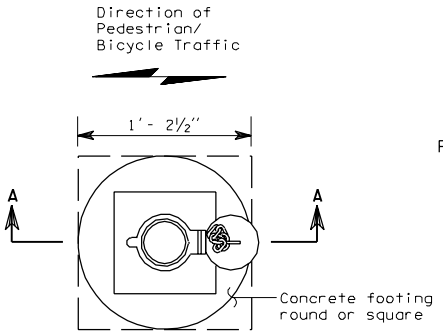

PLAN

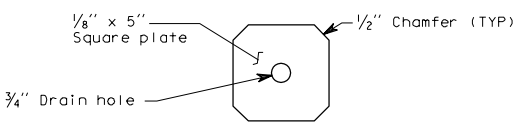

BASE PLATE

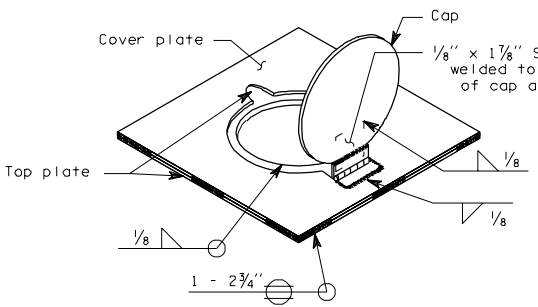

BASE ASSEMBLY

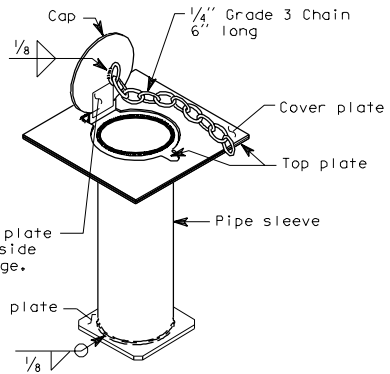

TYPE 1 BOLLARD

H-13 1 of 1

07-25-97