DRAWN BY: MONIQUE GLICK

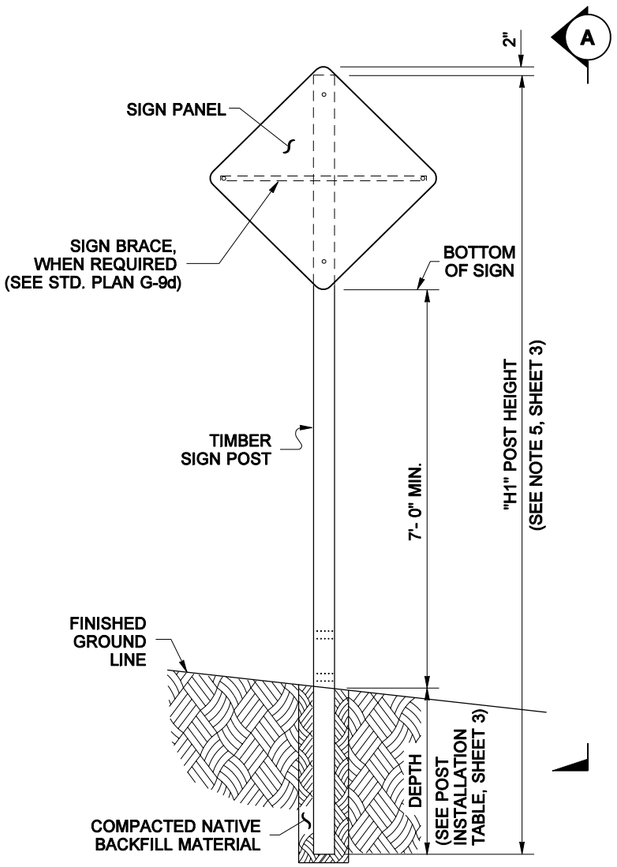

ELEVATION VIEW

SINGLE POST INSTALLATION

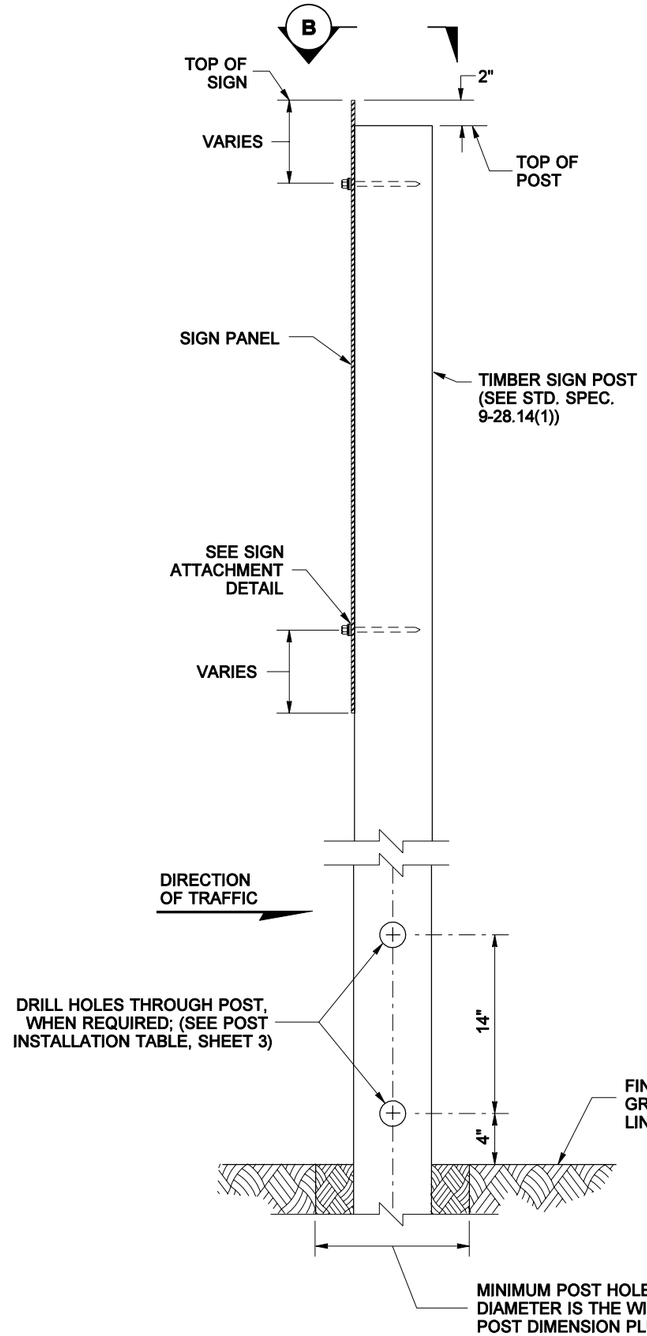

SIDE VIEW (A)

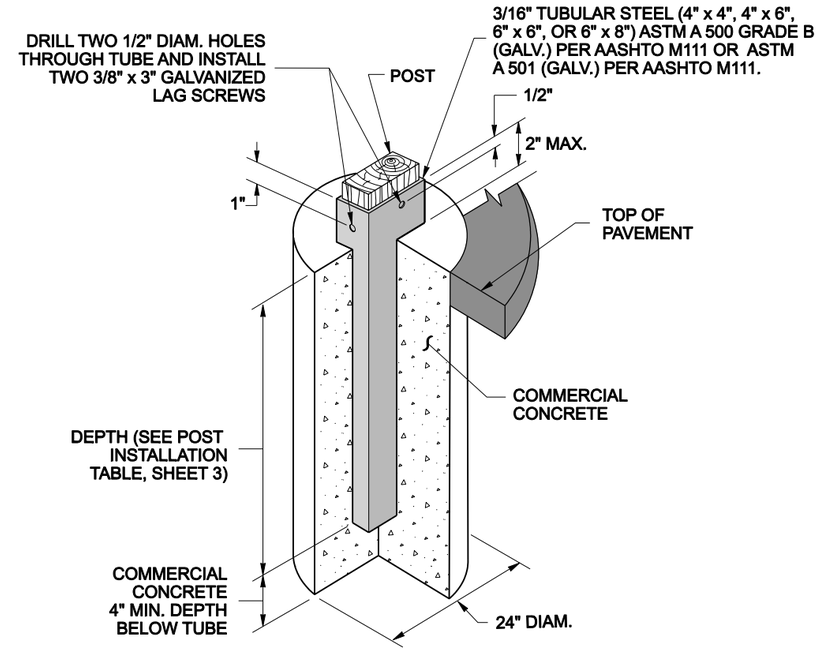

ISOMETRIC VIEW

CONCRETE FOUNDATION SLEEVE DETAIL

(TO BE USED WHEN PLACING TIMBER POST IN A PAVED AREA)

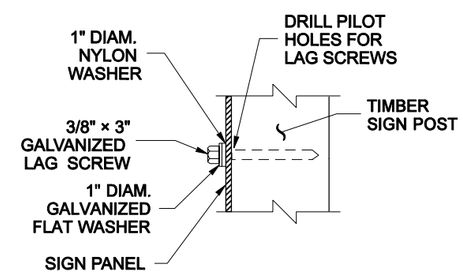

SIGN ATTACHMENT DETAIL

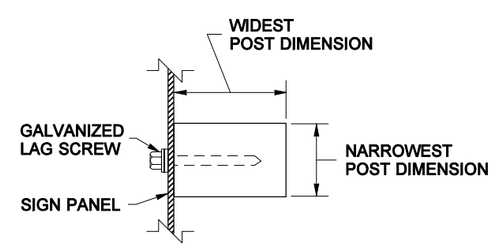

TOP VIEW (B)

R. SCOTT ZELLER
STATE OF WASHINGTON
28680
REGISTERED
PROFESSIONAL ENGINEER

EXPIRES MAY 5, 2005

TIMBER SIGN SUPPORTS

STANDARD PLAN G-4a

SHEET 1 OF 3 SHEETS

APPROVED FOR PUBLICATION

Harold J. Peterfeso — STATE DESIGN ENGINEER

05-20-04 — DATE

Washington State Department of Transportation

NOTE: THIS PLAN IS NOT A LEGAL ENGINEERING DOCUMENT BUT AN ELECTRONIC DUPLICATE. THE ORIGINAL, SIGNED BY THE ENGINEER AND APPROVED FOR PUBLICATION, IS KEPT ON FILE AT THE WASHINGTON STATE DEPARTMENT OF TRANSPORTATION. A COPY MAY BE OBTAINED UPON REQUEST.

DRAWN BY: MONIQUE GLICK

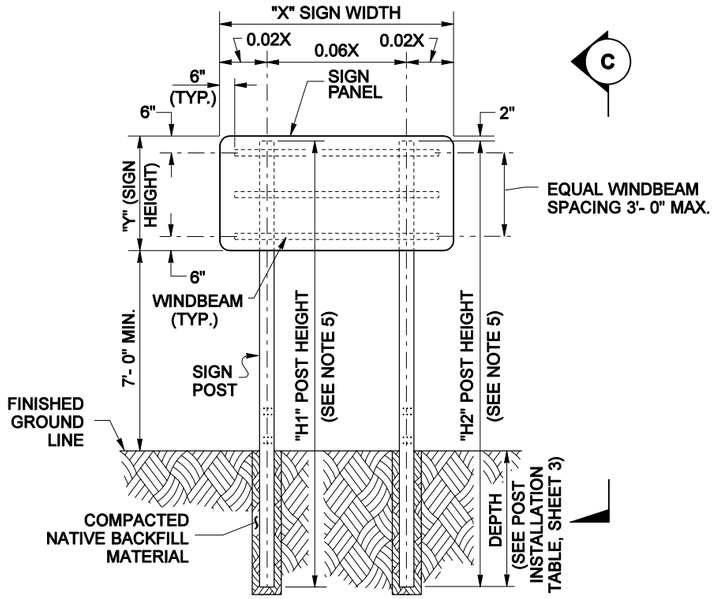

TWO POST INSTALLATION

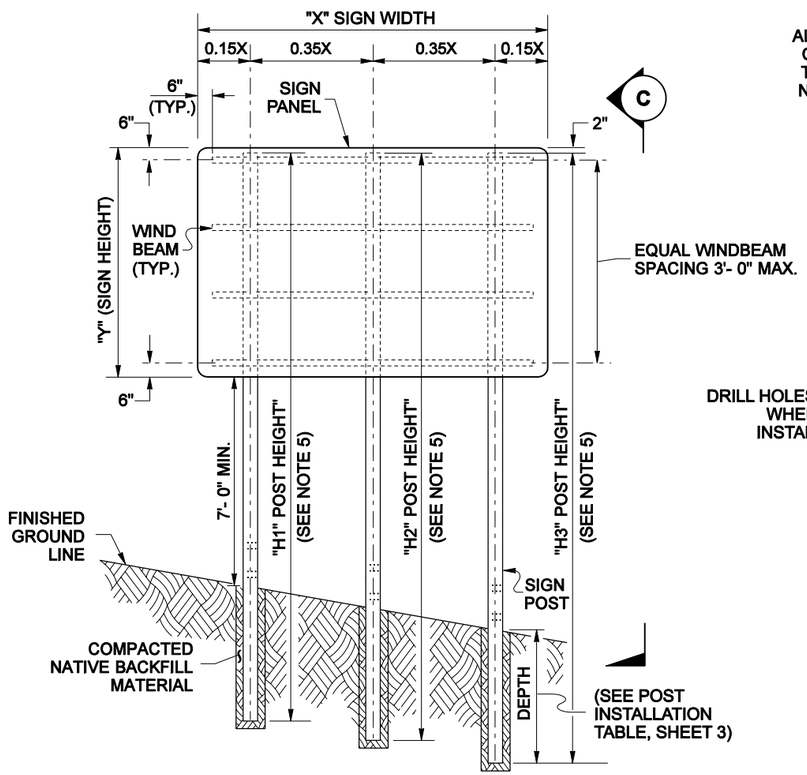

THREE POST INSTALLATION

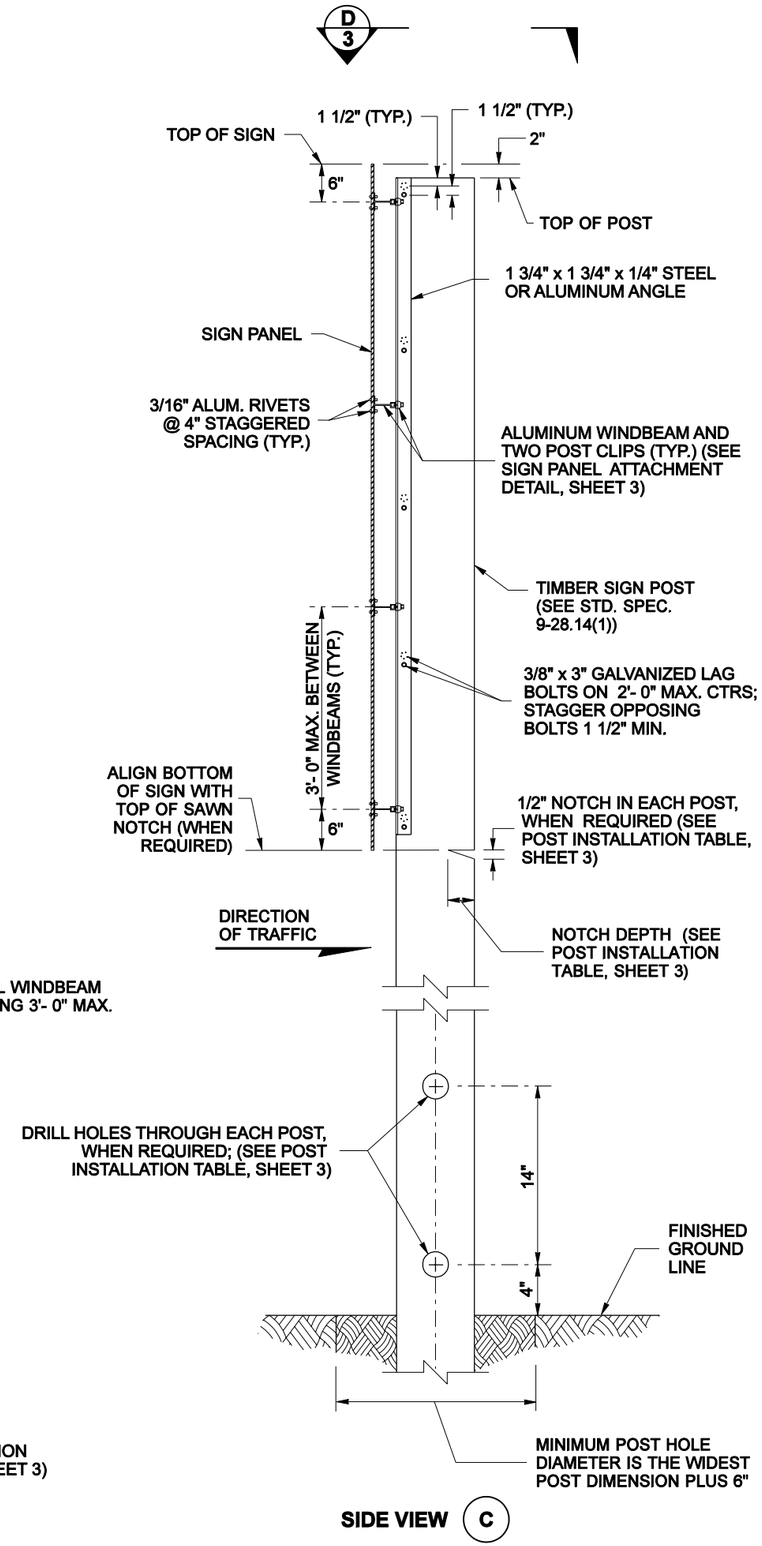

SIDE VIEW

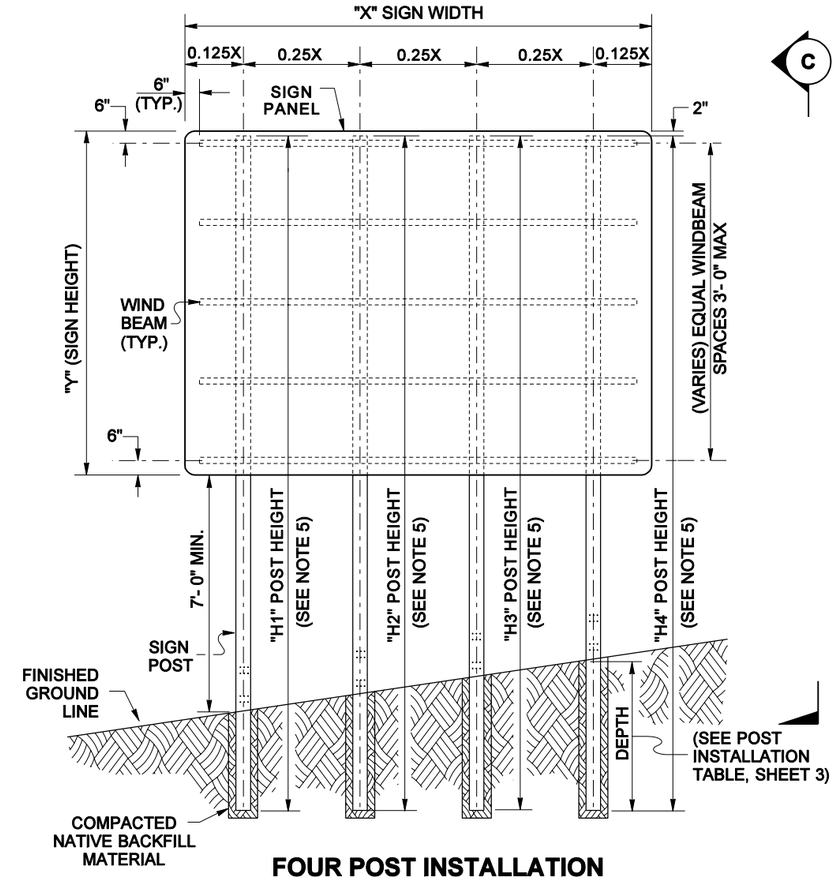

FOUR POST INSTALLATION

EXPIRES MAY 5, 2005

TIMBER SIGN SUPPORTS

STANDARD PLAN G-4a

SHEET 2 OF 3 SHEETS

APPROVED FOR PUBLICATION

Harold J. Peterfeso — STATE DESIGN ENGINEER — *05-20-04* — DATE

Washington State Department of Transportation

NOTE: THIS PLAN IS NOT A LEGAL ENGINEERING DOCUMENT BUT AN ELECTRONIC DUPLICATE THE ORIGINAL, SIGNED BY THE ENGINEER AND APPROVED FOR PUBLICATION, IS KEPT ON FILE AT THE WASHINGTON STATE DEPARTMENT OF TRANSPORTATION. A COPY MAY BE OBTAINED UPON REQUEST.

DRAWN BY: MONIQUE GLICK

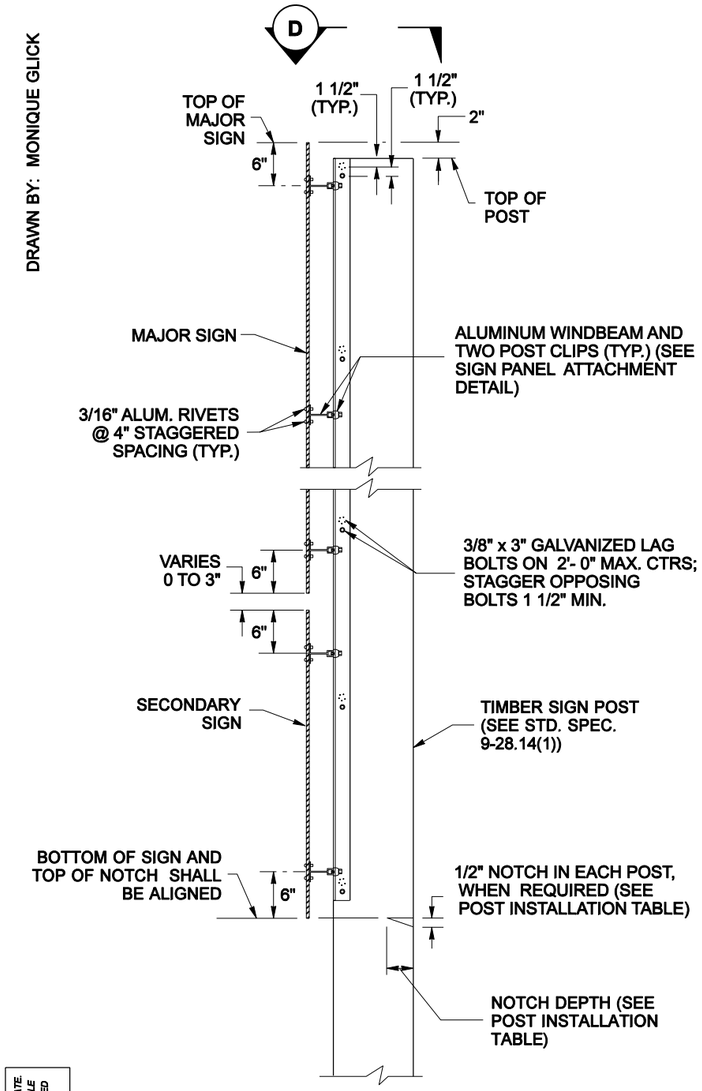

SIDE VIEW (E)

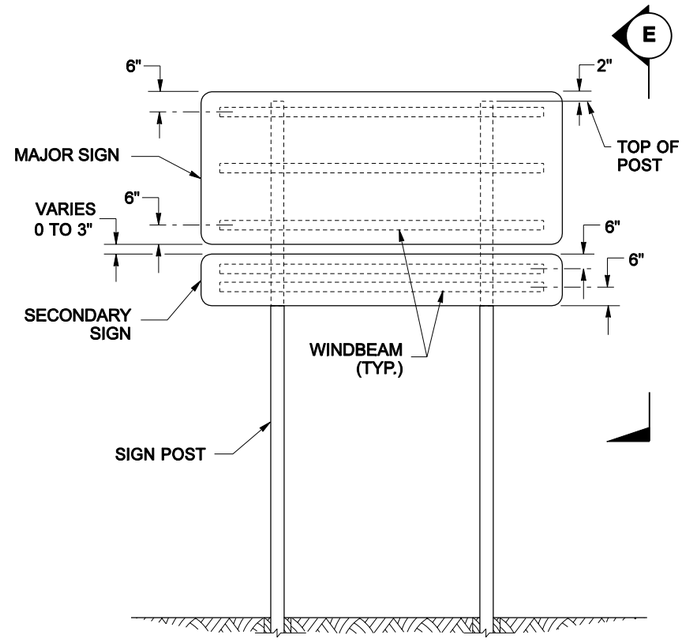

MAJOR AND SECONDARY SIGN INSTALLATION

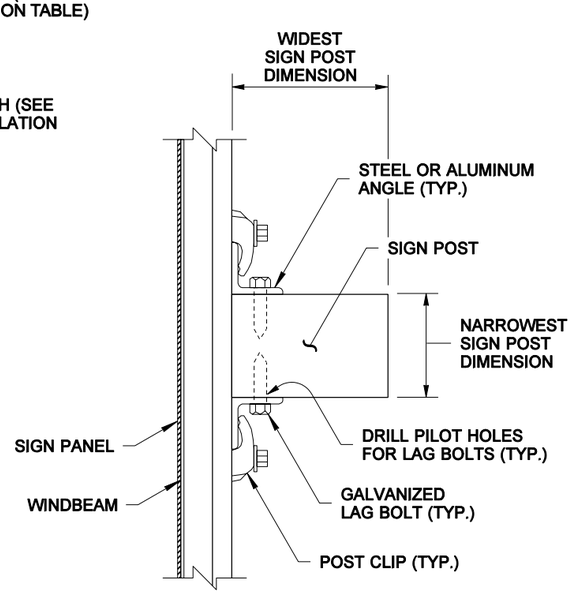

TOP VIEW (D)

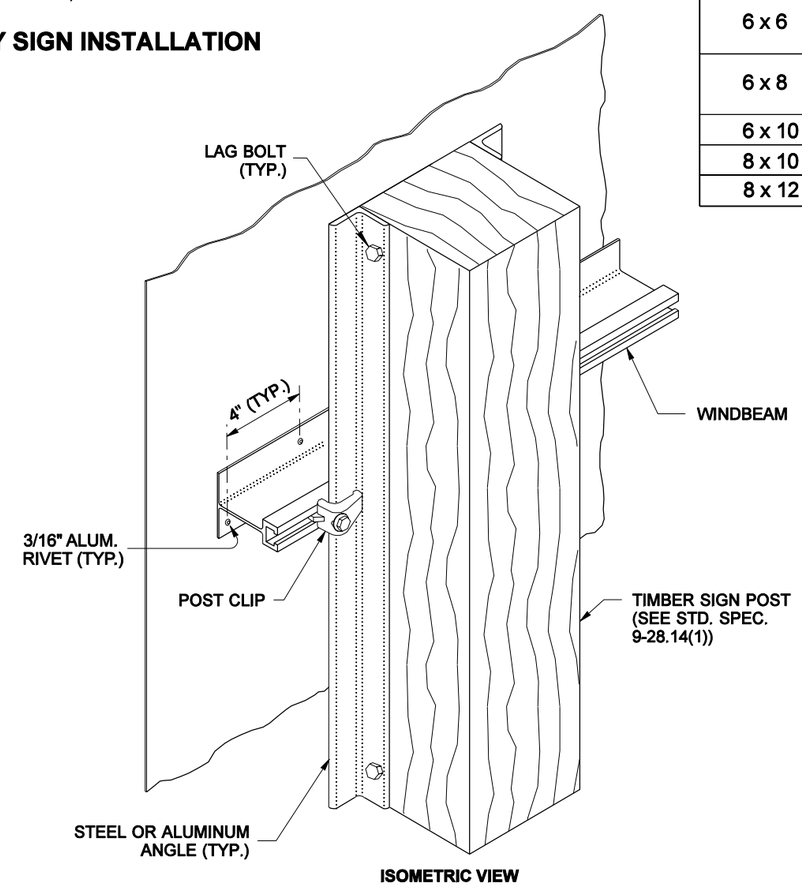

ISOMETRIC VIEW

SIGN PANEL ATTACHMENT DETAIL

NOTES

1. Notch is only required with multiple post installations.
2. 6" x 10", 8" x 10", and 8" x 12" Timber Sign Posts can not be made breakaway and do not have holes or notches. These posts shall not be installed within the Design Clear Zone. They can be installed behind traffic barrier.
3. Signs with a width less than 12 feet and supported on three 6" x 6" or 6" x 8" posts shall not be installed in the clear zone.
4. Signs with a width less than 17 feet and supported on four 6" x 6" or 6" x 8" posts shall not be installed in the clear zone.
5. See "Construction Sign Specification Sheet" of the contract for "H1", "H2", "H3", H"4", "X" & "Y" values and definitions.

POST INSTALLATION TABLE

POST SIZE	DEPTH	HOLE DIAMETER	NOTCH DEPTH See Note 1
4 x 4	3'-0"	NOT REQ'D	NOT REQ'D
4 x 6	4'-0"	1 1/2"	1 1/2"
6 x 6	4'-0"	2" See Note 3 & 4	2" See Note 3 & 4
6 x 8	4'-0"	3" See Note 3 & 4	3" See Note 3 & 4
6 x 10	5'-0"	See Note 2	See Note 2
8 x 10	5'-0"	See Note 2	See Note 2
8 x 12	6'-0"	See Note 2	See Note 2

TIMBER SIGN SUPPORTS

STANDARD PLAN G-4a

SHEET 3 OF 3 SHEETS

APPROVED FOR PUBLICATION

Harold J. Peterfeso — STATE DESIGN ENGINEER — *05-20-04* — DATE

Washington State Department of Transportation

NOTE: THIS PLAN IS NOT A LEGAL ENGINEERING DOCUMENT BUT AN ELECTRONIC DUPLICATE. THE ORIGINAL, SIGNED BY THE ENGINEER AND APPROVED FOR PUBLICATION, IS KEPT ON FILE AT THE WASHINGTON STATE DEPARTMENT OF TRANSPORTATION. A COPY MAY BE OBTAINED UPON REQUEST.