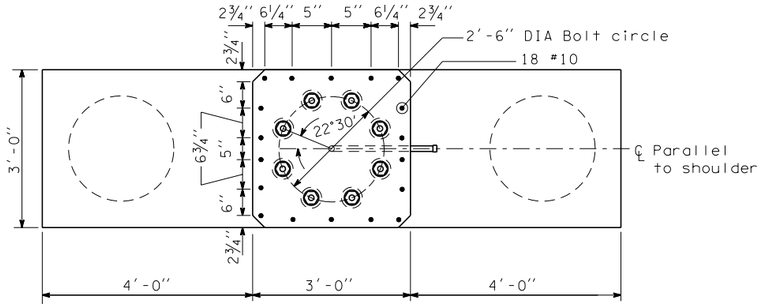

PLAN

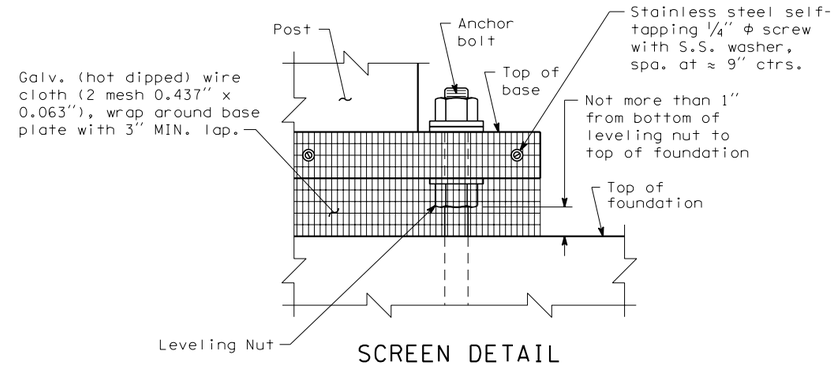

SCREEN DETAIL

on anchor bolt

MATERIAL SPECIFICATIONS	
SHAFT CONCRETE	Class 4000P or Class 4000W
ALL OTHER CONCRETE	CLASS 4000
STEEL REINF. BAR	AASHTO M 31
ANCHOR RODS	ASTM F 1554 Grade 105
ANCHOR NUTS	AASHTO M 291
ANCHOR WASHERS	AASHTO M 293
ANCHORAGE GALVANIZING	AASHTO M 232
STEEL TEMPLATE	ASTM A 36

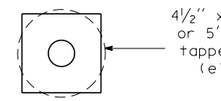

THREADED ROD ALTERNATE

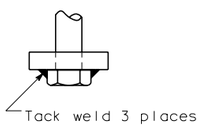

STUD BOLT ALTERNATE

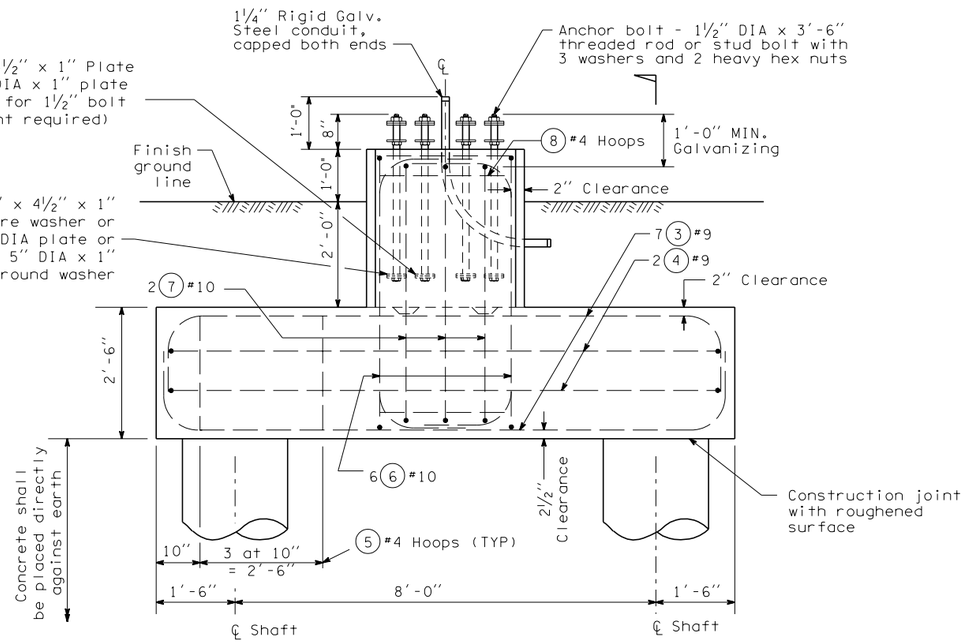

ELEVATION

A

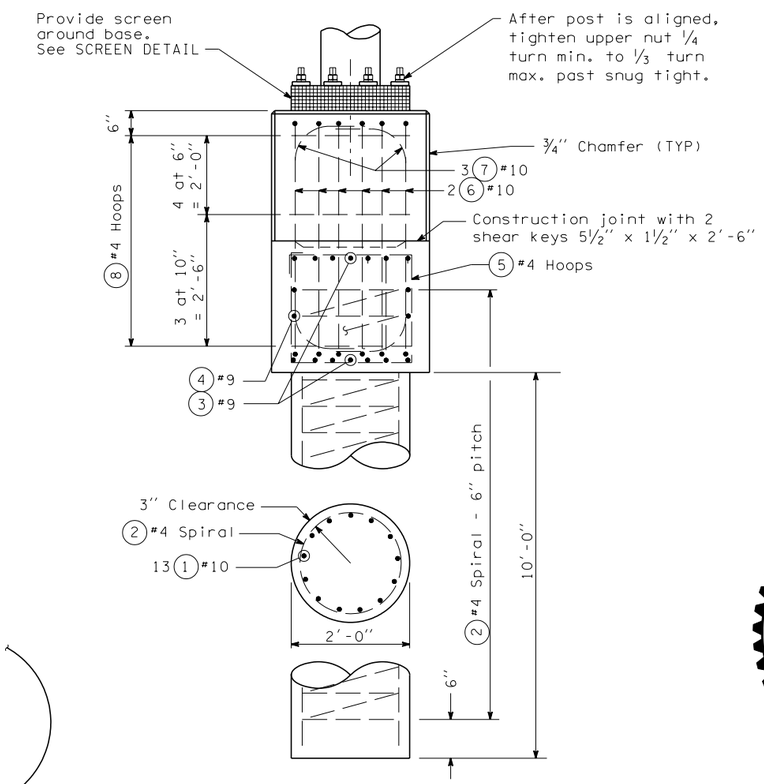

A SECTION

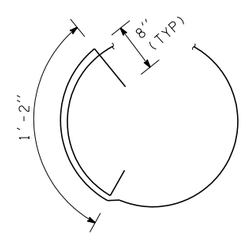

BAR 2 #4
LAP SPLICE DETAIL

BAR LIST - TYPE 1

All dimensions are out to out

MARK	LOCATION	NO	SIZE	LENGTH	BENDING DIAGRAM
1	Shaft - vertical	26	10	12'-2"	Str
2	Shaft - spiral	2	4	117'-2"	
3	Cap beam - horitzontal	14	9	13'-1"	
4	Cap beam - sides	4	9	12'-10"	
5	Cap beam hoop	8	4	10'-7"	
6	Pedestal - vertical	12	10	7'-11"	
7	Pedestal - vertical	6	10	7'-8"	
8	Pedestal - hoop	7	4	11'-8"	

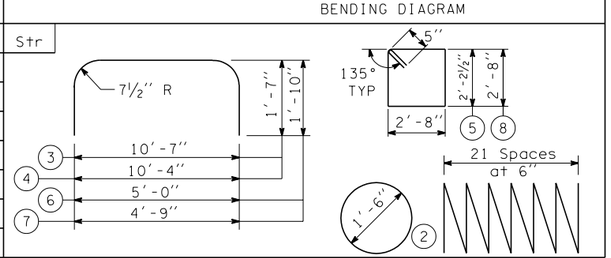

EXPIRES JUNE 29, 2004

CANTILEVER SIGN STRUCTURE FOUNDATIONS

STANDARD PLAN G-3a

SHEET 1 OF 2 SHEETS

NOTE: THIS PLAN IS NOT A LEGAL ENGINEERING DOCUMENT BUT AN ELECTRONIC DUPLICATE. THE ORIGINAL, SIGNED BY THE ENGINEER AND APPROVED FOR PUBLICATION, IS KEPT ON FILE AT THE WASHINGTON STATE DEPARTMENT OF TRANSPORTATION. A COPY MAY BE OBTAINED UPON REQUEST.

DATE	REVISION	BY
03/2002	ADDED MATERIALS SPECIFICATIONS AND SCREEN DETAIL	MAS

APPROVED FOR PUBLICATION

Harold J. Peterfeso — STATE DESIGN ENGINEER — *06-04-02* DATE

Washington State Department of Transportation

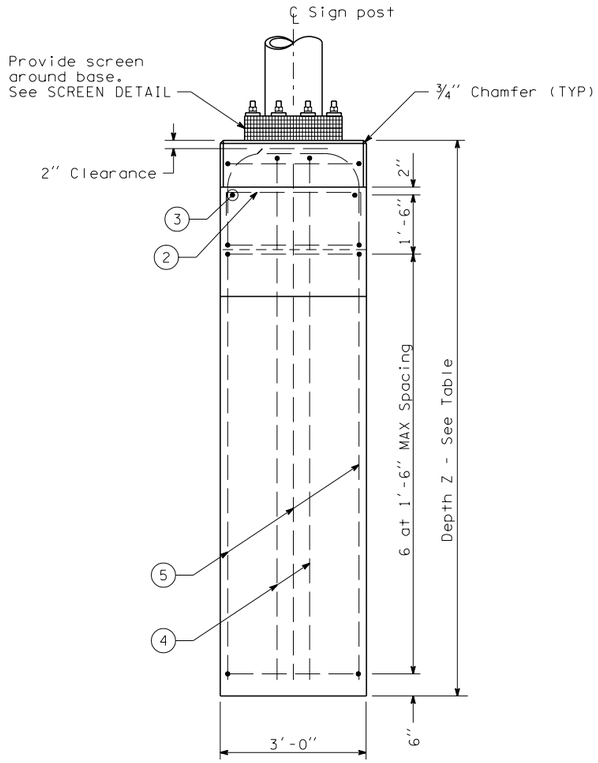

Ⓒ SECTION

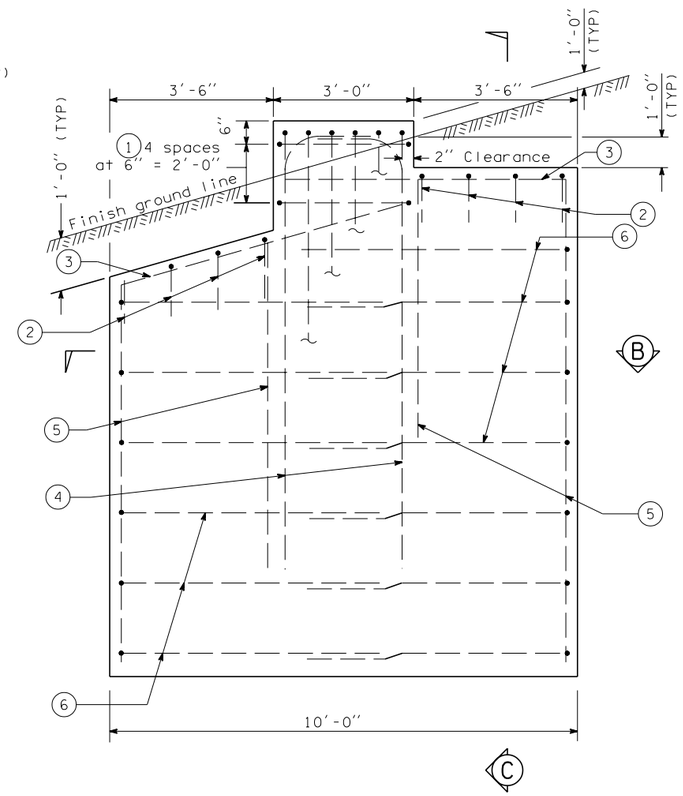

ELEVATION

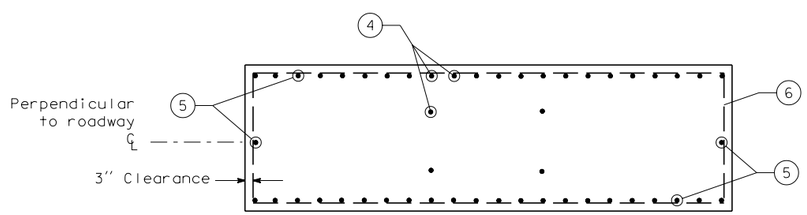

Ⓑ SECTION

BAR LIST - TYPES 2 AND 3

All dimensions are out to out

FOUNDATION TYPE	MARK	LOCATION	TOTAL SIGN AREA 200 sf or less NO	SIZE	200 sf+ -400 sf NO	SIZE	
2 and 3	1	Pedestal hoop	5	4	5	4	
	2	Foundation wall ties	8	5	8	5	
	3	Foundation wall horizontal	4	5	4	5	Str
	4	Foundation wall vertical	12	10	16	10	
	5	Foundation wall vertical	22	6	34	6	Str
2	6	Foundation wall horizontal	10	5	12	5	
3	6	Foundation wall horizontal	12	5	14	5	

BENDING DIAGRAM

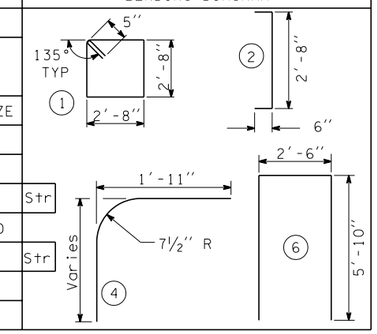

VALUES OF Z

Foundation Type	Total Sign Area 200 sf or less	200 sf+ -400 sf	Soil Type
2	8′-0″	10′-0″	Average
3	10′-0″	12′-6″	Poor

EXPIRES JUNE 29, 2004

CANTILEVER SIGN STRUCTURE FOUNDATIONS

STANDARD PLAN G-3a

SHEET 2 OF 2 SHEETS

FOUNDATION TYPE 2 AND 3

NOTE: THIS PLAN IS NOT A LEGAL ENGINEERING DOCUMENT BUT AN ELECTRONIC DUPLICATE. THE ORIGINAL, SIGNED BY THE ENGINEER AND APPROVED FOR PUBLICATION, IS KEPT ON FILE AT THE WASHINGTON STATE DEPARTMENT OF TRANSPORTATION. A COPY MAY BE OBTAINED UPON REQUEST.

DATE	REVISION	BY
03/2002	REVISED DIMENSIONS ON REBAR MARK 6 AND HEIGHT ABOVE GROUND	MAS

APPROVED FOR PUBLICATION

Harold J. Peterfeso — STATE DESIGN ENGINEER — *06-04-02* DATE

Washington State Department of Transportation