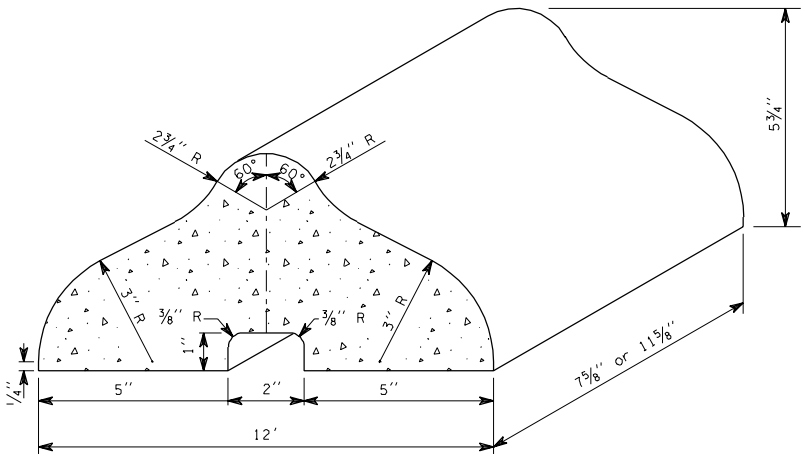

TYPE C BLOCK

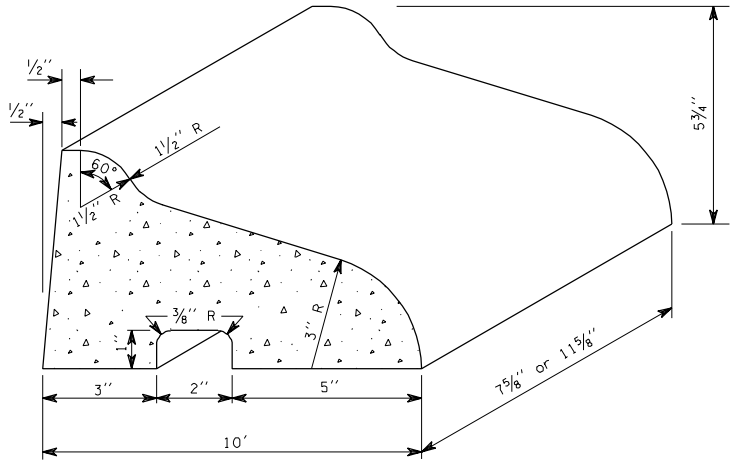

TYPE A BLOCK

BLOCK TRAFFIC CURB

F-2a 1 of 1

05-30-97