NOTE
Approximate weights: Ring 173 lbs
Cover 123 lbs
Total 296 lbs

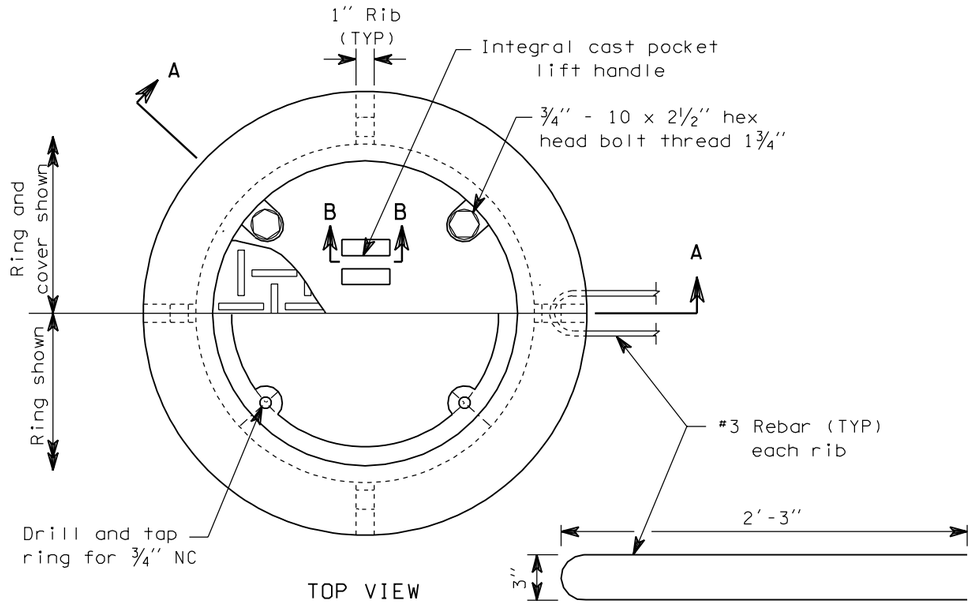

TOP VIEW

RING AND COVER

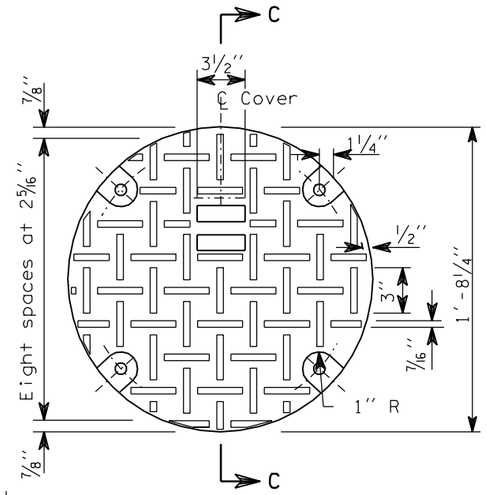

TOP VIEW

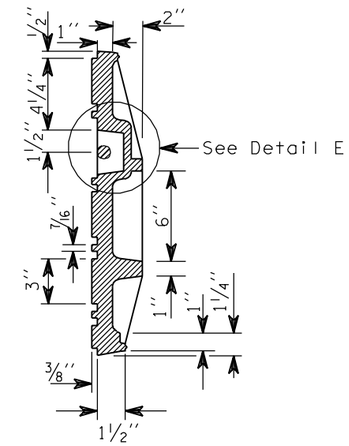

SECTION C-C

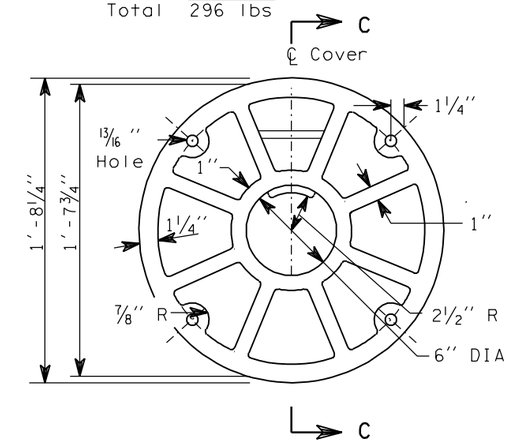

BOTTOM VIEW

MANHOLE COVER

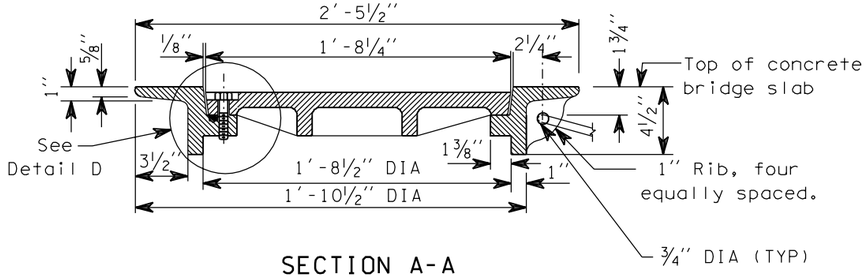

SECTION A-A
(Raised traffic pattern not shown)

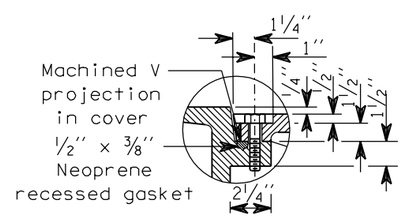

DETAIL D

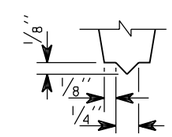

V PROJECTION DETAIL

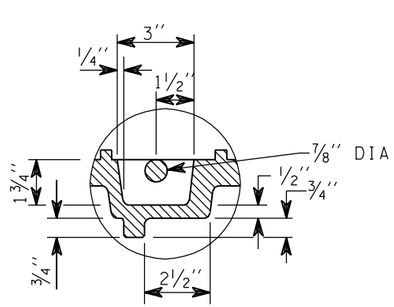

DETAIL E
(Turned 90°)

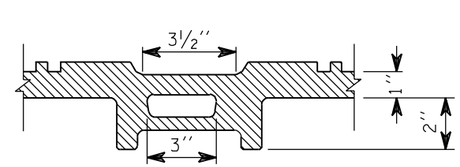

SECTION B-B

M. MYINT LWIN
STATE OF WASHINGTON
10536
REGISTERED
PROFESSIONAL ENGINEER

EXPIRES JANUARY 17, 1999

MANHOLE RING AND COVER FOR BRIDGES
STANDARD PLAN E-5

NOTE: THIS PLAN IS NOT A LEGAL ENGINEERING DOCUMENT BUT AN ELECTRONIC DUPLICATE. THE ORIGINAL, SIGNED BY THE ENGINEER AND APPROVED FOR PUBLICATION, IS KEPT ON FILE AT THE WASHINGTON STATE DEPARTMENT OF TRANSPORTATION. A COPY MAY BE OBTAINED UPON REQUEST.

APPROVED FOR PUBLICATION

Brian Ziegler — STATE DESIGN ENGINEER

5/29/98 — DATE

WASHINGTON STATE DEPARTMENT OF TRANSPORTATION
OLYMPIA, WASHINGTON