NOTE
Spacing between the numeral "1" and any other numeral is 1". Spacing between all other numerals is ¾".

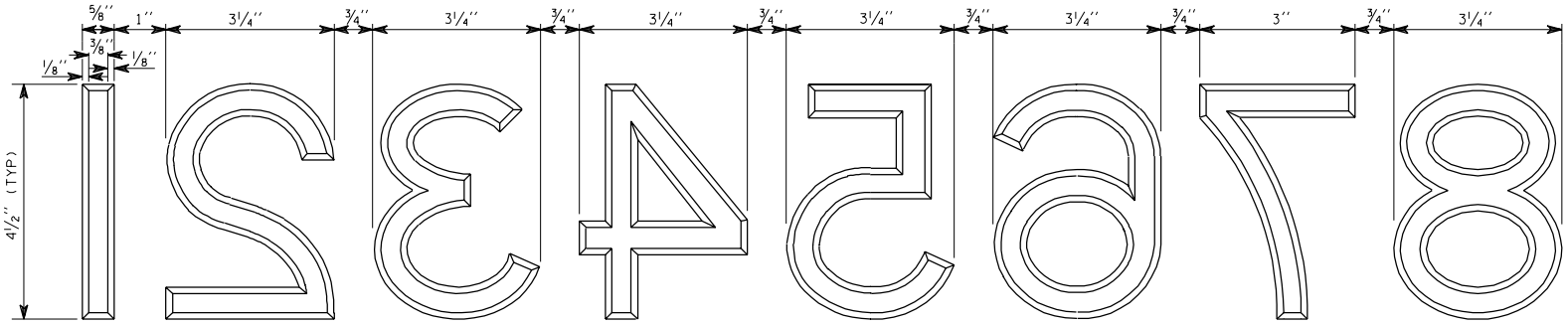

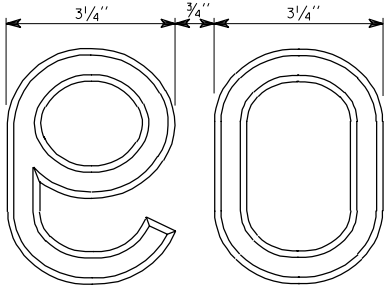

DATE NUMERALS

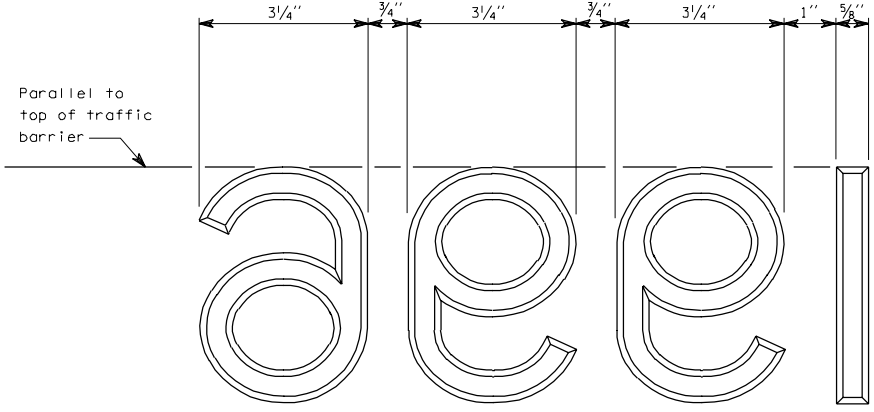

TYPICAL DATE

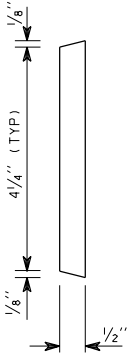

END VIEW

E-1 1 of 1

07-25-97