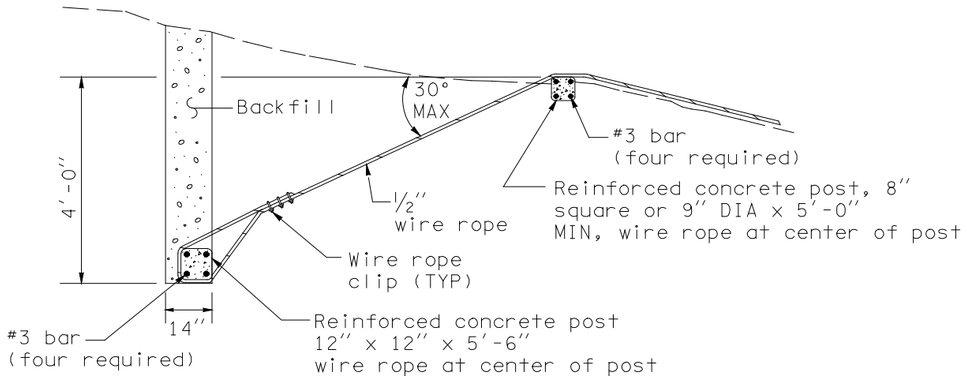

TYPE 1 ANCHOR
(FOR USE IN EARTH)

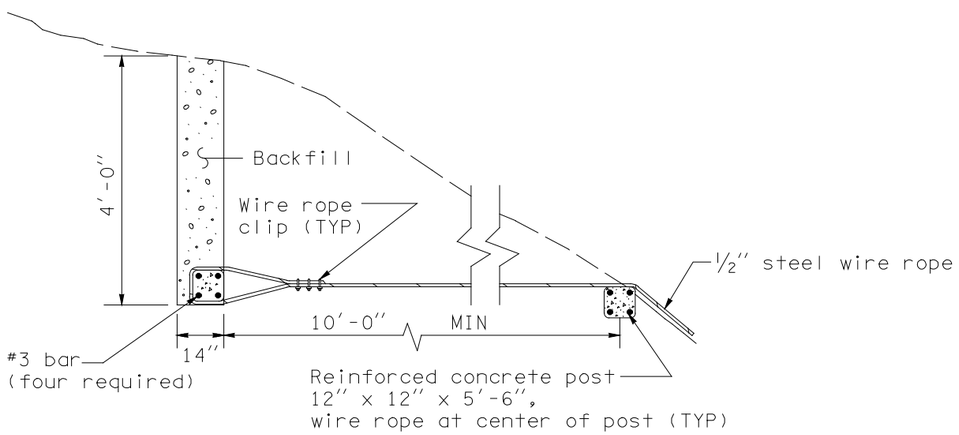

TYPE 2 ANCHOR
(FOR USE IN COMBINED EARTH AND ROCK)

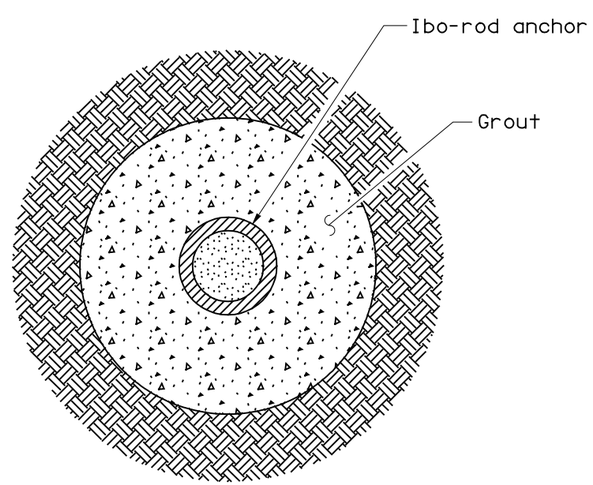

SECTION A-A

NOTE:

1. Two twin base wire rope clips at 3" centers may be substituted for three u-bolted wire rope clips shown.

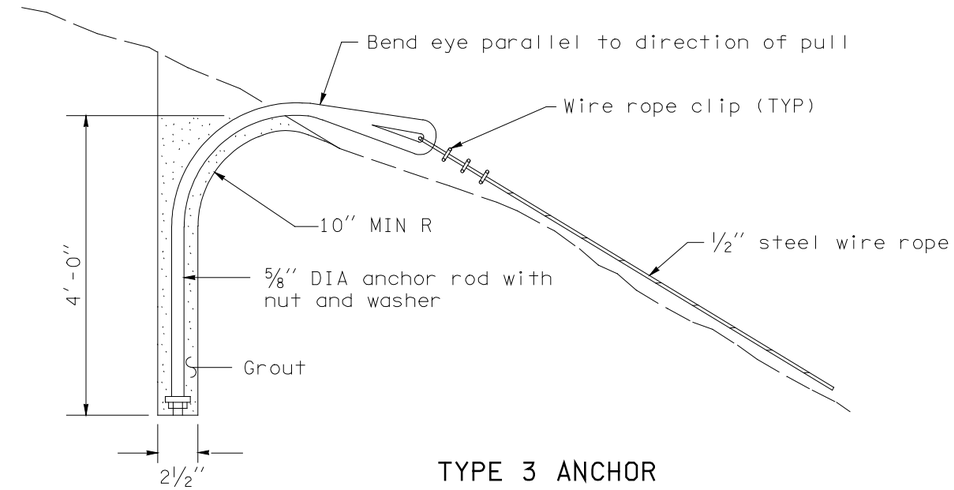

TYPE 3 ANCHOR
(FOR USE IN SOLID ROCK)

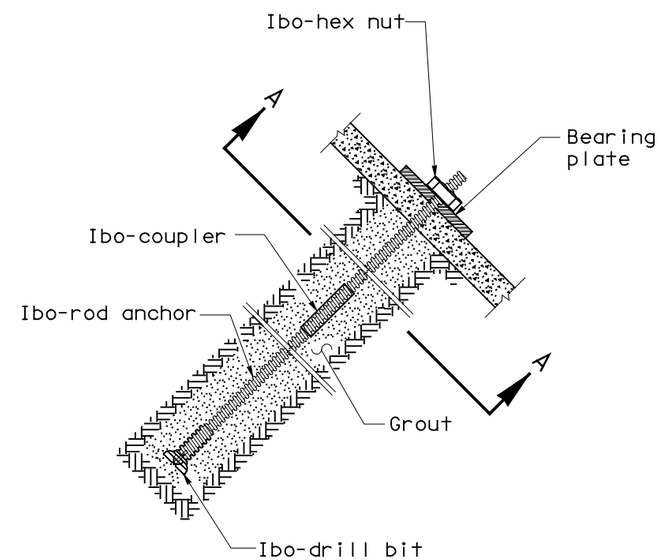

TYPE 4 ANCHOR
(FOR USE IN SOLID ROCK)

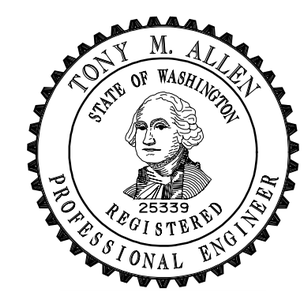

EXPIRES JULY 1, 2001

WIRE MESH SLOPE PROTECTION

STANDARD PLAN D-7a

NOTE: THIS PLAN IS NOT A LEGAL ENGINEERING DOCUMENT BUT AN ELECTRONIC DUPLICATE. THE ORIGINAL, SIGNED BY THE ENGINEER AND APPROVED FOR PUBLICATION, IS KEPT ON FILE AT THE WASHINGTON STATE DEPARTMENT OF TRANSPORTATION. A COPY MAY BE OBTAINED UPON REQUEST.

DATE	REVISION	BY
9/99	Title changed; cable references changed to wire rope.	JR

APPROVED FOR PUBLICATION

Clifford E. Mansfield *10/06/99*

DEPUTY STATE DESIGN ENGINEER — DATE

WASHINGTON STATE DEPARTMENT OF TRANSPORTATION
OLYMPIA, WASHINGTON