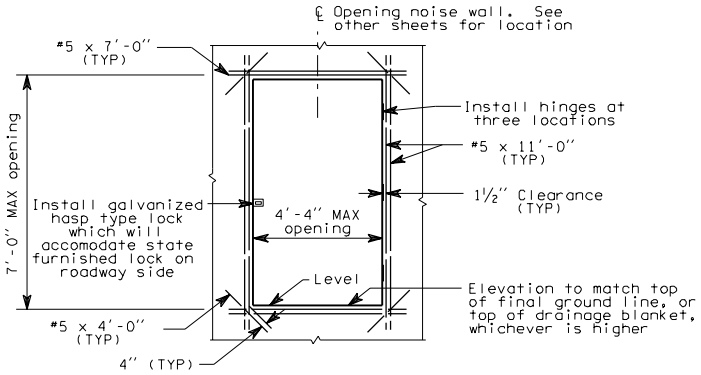

ELEVATION

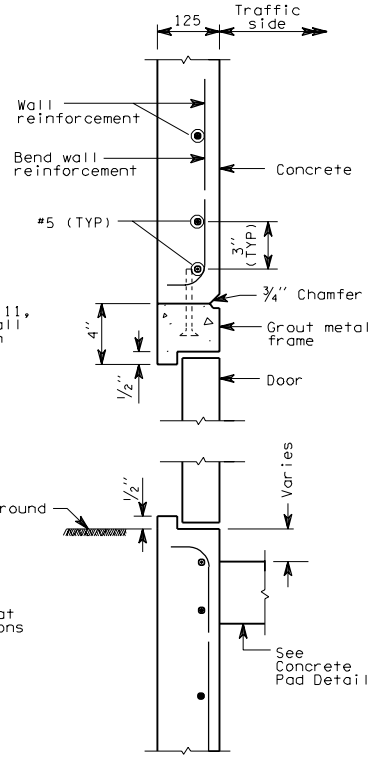

SECTION A-A

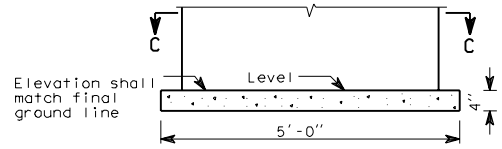

CONCRETE PAD

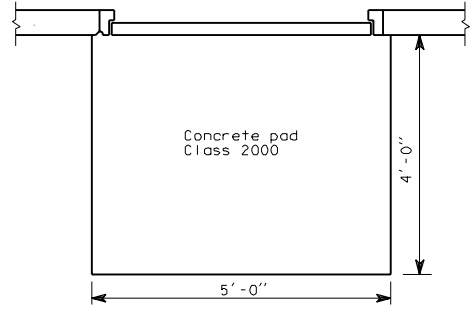

VIEW C

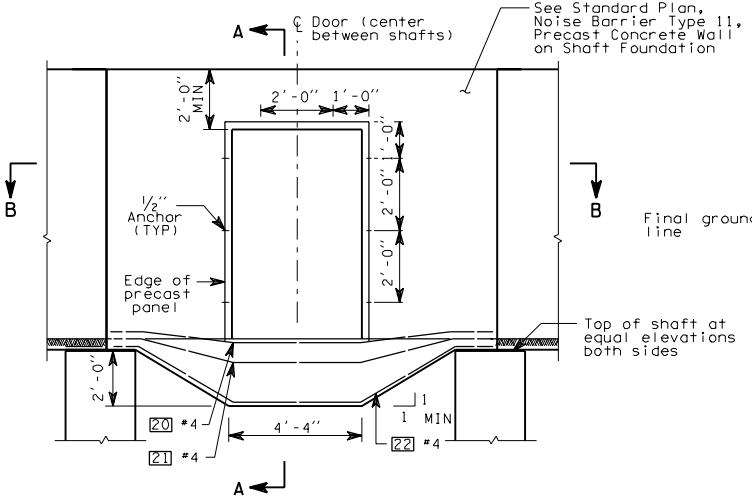

BOTTOM OF WALL DETAIL

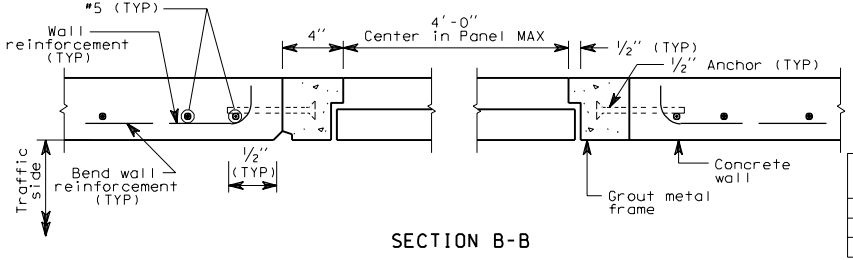

SECTION B-B

MK NUMBER	BAR SIZE	BEND TYPE	NUMBER PER DOOR	X	Y	Z	H	J	TOTAL LENGTH
20	4	91	1	1'-1"	2'-11"	4'-3"	8"	1'-5"	11'-5"
21	4	91	1	11"	3'-1"	4'-3"	1'-4"	1'-4"	11'-10"
22	4	91	1	10"	3'-2"	4'-3"	2'-0"	1'-3"	12'-1"

ACCESS DOOR - TYPE 1

PRECAST CONCRETE WALL ON SHAFT FOUNDATION

D-2u 1 of 1

03-07-97