| WALL HT H | TYPE 20A | | | | | | TYPE 20B | | | | | | TYPE 20C | | | | | | TYPE 20D | | | | | | WALL HT H |
|---|---|---|---|---|---|---|---|---|---|---|---|---|---|---|---|---|---|---|---|---|---|---|---|---|---|
| | DEPTH D1 | DEPTH D2 | BAR A | BAR B | BAR C | PILASTER SPACING L | DEPTH D1 | DEPTH D2 | BAR A | BAR B | BAR C | PILASTER SPACING L | DEPTH D1 | DEPTH D2 | BAR A | BAR B | BAR C | PILASTER SPACING L | DEPTH D1 | DEPTH D2 | BAR A | BAR B | BAR C | PILASTER SPACING L | |
| 6'-0" | 5'-6" | 5'-0" | 6-#6 | 4-#4 | #5 at 32" | 16'-0" | 6'-6" | 5'-9" | 6-#6 | 4-#4 | #5 at 32" | 16'-0" | 6'-3" | 5'-3" | 6-#6 | 4-#4 | #6 at 32" | 16'-0" | 7'-0" | 6'-0" | 6-#6 | 4-#4 | #6 at 32" | 16'-0" | 6'-0" |
| 8'-0" | 6'-6" | 5'-6" | 6-#6 | 4-#4 | #5 at 32" | 16'-0" | 7'-6" | 6'-6" | 6-#6 | 4-#4 | #5 at 32" | 16'-0" | 7'-0" | 6'-0" | 6-#6 | 4-#4 | #6 at 32" | 16'-0" | 8'-3" | 7'-0" | 6-#6 | 4-#5 | #6 at 32" | 16'-0" | 8'-0" |
| 10'-0" | 7'-0" | 6'-0" | 6-#6 | 4-#4 | #5 at 32" | 16'-0" | 8'-6" | 7'-0" | 6-#6 | 4-#5 | #5 at 32" | 16'-0" | 7'-9" | 6'-6" | 6-#6 | 4-#5 | #6 at 32" | 16'-0" | 9'-3" | 7'-9" | 6-#6 | 4-#6 | #6 at 32" | 16'-0" | 10'-0" |
| 12'-0" | 7'-9" | 6'-6" | 6-#6 | 4-#5 | #5 at 32" | 16'-0" | 9'-3" | 7'-9" | 6-#6 | 4-#6 | #5 at 32" | 16'-0" | 8'-6" | 7'-3" | 6-#6 | 4-#5 | #6 at 32" | 16'-0" | 10'-3" | 8'-6" | 6-#6 | 4-#7 | #6 at 32" | 16'-0" | 12'-0" |
| 14'-0" | 8'-3" | 7'-0" | 6-#6 | 4-#5 | #5 at 32" | 16'-0" | 10'-0" | 8'-6" | 6-#6 | 4-#7 | #5 at 32" | 16'-0" | 9'-3" | 7'-9" | 6-#6 | 4-#6 | #6 at 32" | 16'-0" | 11'-0" | 9'-3" | 6-#6 | 6-#8 | #6 at 32" | 16'-0" | 14'-0" |
| 16'-0" | 9'-0" | 7'-6" | 6-#6 | 4-#6 | #5 at 32" | 16'-0" | 11'-0" | 9'-0" | 6-#6 | 6-#8 | #5 at 32" | 16'-0" | 10'-0" | 8'-3" | 6-#6 | 4-#7 | #6 at 32" | 16'-0" | 12'-0" | 9'-9" | 6-#6 | 6-#9 | #6 at 32" | 16'-0" | 16'-0" |
| 18'-0" | 9'-6" | 8'-0" | 6-#6 | 4-#7 | #5 at 32" | 16'-0" | 11'-9" | 9'-9" | 6-#6 | 6-#9 | #5 at 32" | 16'-0" | 10'-9" | 9'-0" | 6-#6 | 6-#7 | #6 at 32" | 16'-0" | 12'-9" | 10'-6" | 6-#7 | 6-#10 | #6 at 32" | 16'-0" | 18'-0" |
| 20'-0" | 10'-3" | 8'-6" | 6-#6 | 6-#7 | #5 at 32" | 16'-0" | 12'-6" | 10'-3" | 6-#7 | 6-#10 | #5 at 32" | 16'-0" | 11'-3" | 9'-6" | 6-#6 | 6-#8 | #6 at 32" | 16'-0" | 13'-0" | 10'-6" | 6-#7 | 6-#10 | #6 at 32" | 14'-0" | 20'-0" |
| 22'-0" | 10'-9" | 9'-0" | 6-#6 | 6-#8 | #5 at 32" | 16'-0" | 12'-6" | 10'-3" | 6-#7 | 6-#10 | #5 at 32" | 16'-0" | 12'-0" | 10'-0" | 6-#7 | 6-#9 | #6 at 32" | 16'-0" | 13'-0" | 10'-6" | 6-#8 | 6-#10 | #6 at 32" | 12'-0" | 22'-0" |
| 24'-0" | 11'-3" | 9'-6" | 6-#6 | 6-#9 | #5 at 32" | 16'-0" | 12'-6" | 10'-3" | 6-#7 | 6-#10 | #5 at 32" | 12'-0" | 12'-9" | 10'-6" | 6-#7 | 6-#10 | #6 at 32" | 16'-0" | 13'-6" | 11'-3" | 6-#8 | 6-#10 | #6 at 32" | 12'-0" | 24'-0" |

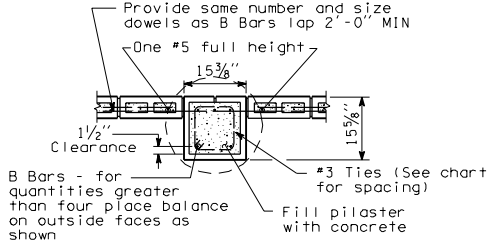


SECTION A-A

| TIE SPACING | |
|---|---|
| BAR A SIZE | SPACING |
| #4 | 6" OC |
| #5 | 6" OC |
| #6 | 5" OC |
| #7, #8, #9, #10 | 4" OC |

NOTES

1. Wall to be designated Noise Barrier Type 20A, 20B, 20C or 20D. The Contract specifies actual wall designations.
2. For intermediate wall heights, use the next higher H.
3. All masonry shall be a hollow unit and installed as running bond.
4. All masonry is to be specially inspected.
5. All Concrete Masonry Unit (CMU) cells that have vertical steel reinforcing bars or bond beam units shall be filled with grout.
6. Panels shall have at least 3 feet of level ground on each side.
7. Construction joints in the footing shall be spaced at 120 feet maximum.
8. The Contract shall specify actual foundation requirements D1 or D2.
9. See "Masonry Wall Finishes and Details" sheet for masonry block finishes, special shapes, sizes and layouts.

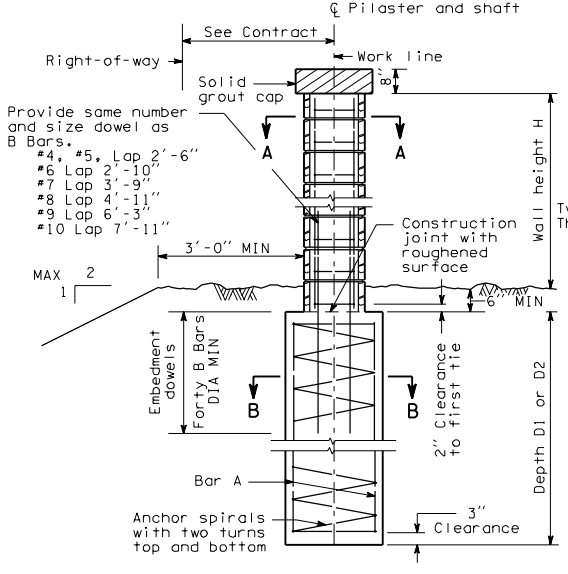


TYPICAL PILASTER AND PILE

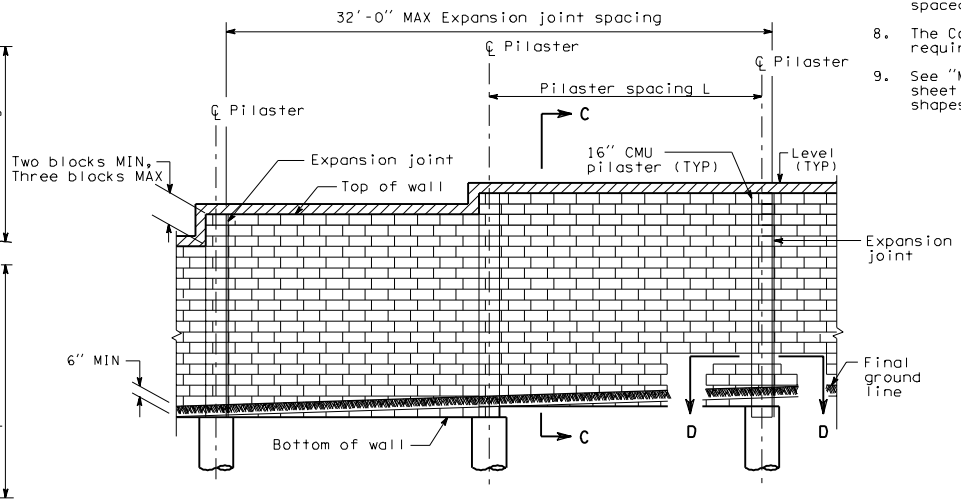


ELEVATION

# NOISE BARRIER - TYPE 20
## MASONRY WALL ON SHAFT FOUNDATION

D-2t

03-14-97

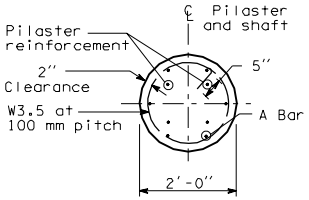


SECTION B-B

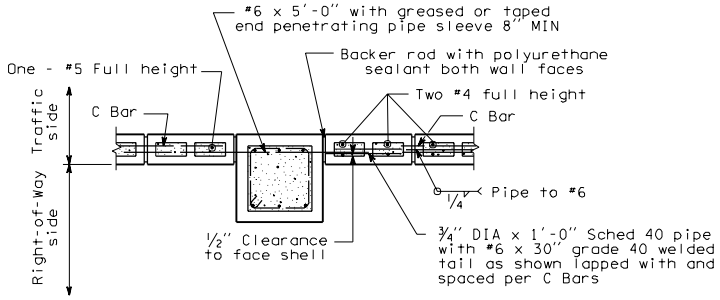


SECTION D-D

Typical Expansion Joint

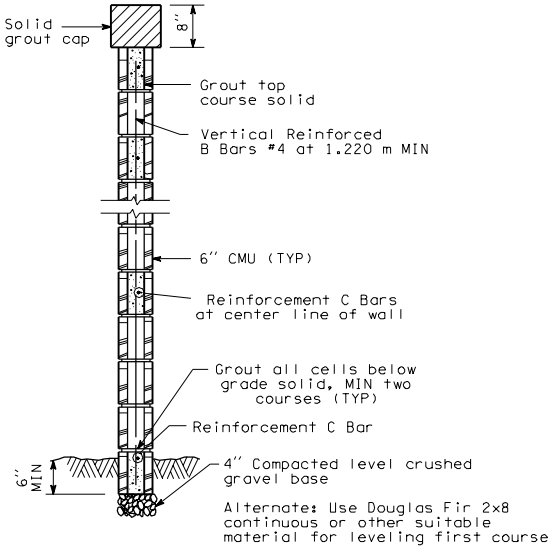


SECTION C-C

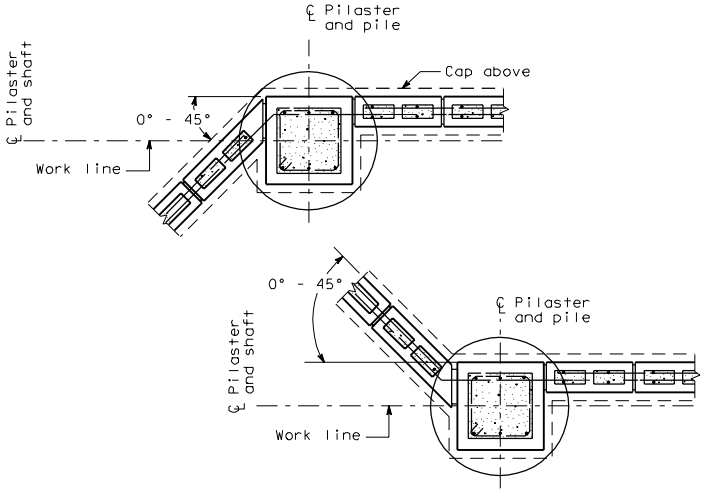


ANGLE POINT PLAN

# NOISE BARRIER - TYPE 20
## MASONRY WALL ON SHAFT FOUNDATION

D-2t

03-14-97