WALL HT H	TYPE 19A CMU	DIM X	BAR D	BAR C	DIA	P BARS	DEPTH D1	DEPTH D2
6'-0"	8"	——	#6 at 48"	——	12"	6 - #5	5'-3"	4'-9"
8'-0"	8"	——	#6 at 48"	——	12"	6 - #5	6'-0"	5'-3"
10'-0"	8"	——	#6 at 48"	——	12"	6 - #5	6'-9"	5'-9"
12'-0"	8"	——	#6 at 48"	——	12"	6 - #5	7'-3"	6'-3"
14'-0"	8"	——	#6 at 32"	——	12"	6 - #6	7'-9"	6'-9"
16'-0"	10"	5'-4"	#6 at 32"	——	12"	6 - #7	8'-3"	7'-0"
18'-0"	10"	6'-0"	#6 at 48"	#6 at 48"	12"	6 - #8	8'-9"	7'-6"
20'-0"	10"	6'-8"	#6 at 32"	#6 at 32"	12"	6 - #9	9'-3"	7'-9"
22'-0"	10"	7'-4"	#6 at 24"	#6 at 24"	14"	8 - #7	9'-3"	7'-9"
24'-0"	10"	8'-0"	#6 at 24"	#6 at 24"	14"	8 - #8	9'-9"	8'-3"

WALL HT H	TYPE 19B CMU	DIM X	BAR D	BAR C	DIA	P BARS	DEPTH D1	DEPTH D2
6'-0"	8"	——	#6 at 48"	——	12"	6 - #5	6'-0"	5'-3"
8'-0"	8"	——	#6 at 48"	——	12"	6 - #5	7'-0"	6'-0"
10'-0"	8"	——	#6 at 48"	——	12"	6 - #6	7'-9"	6'-9"
12'-0"	10"	4'-0"	#6 at 40"	——	12"	6 - #7	8'-6"	7'-3"
14'-0"	10"	4'-8"	#6 at 32"	#6 at 32"	14"	8 - #7	8'-6"	7'-3"
16'-0"	10"	5'-4"	#6 at 24"	#6 at 24"	14"	8 - #7	9'-3"	8'-0"
18'-0"	10"	6'-0"	#6 at 16"	#6 at 16"	16"	6 - #8	9'-3"	8'-0"
20'-0"	10"	8'-0"	#7 at 16"	#7 at 32"	16"	8 - #7	10'-0"	8'-6"
22'-0"	10"	10'-0"	#7 at 16"	#7 at 24"	16"	8 - #8	10'-6"	9'-0"
24'-0"	10"	12'-0"	#8 at 16"	#7 at 16"	16"	8 - #8	11'-3"	9'-6"

WALL HT H	TYPE 19C CMU	DIM X	BAR D	BAR C	DIA	P BARS	DEPTH D1	DEPTH D2
6'-0"	8"	——	#6 at 48"	——	12"	6 - #5	5'-9"	5'-0"
8'-0"	8"	——	#6 at 48"	——	12"	6 - #5	6'-6"	5'-6"
10'-0"	8"	——	#6 at 48"	——	12"	6 - #5	7'-3"	6'-3"
12'-0"	8"	——	#6 at 40"	——	12"	6 - #6	7'-9"	6'-9"
14'-0"	10"	4'-0"	#6 at 40"	——	12"	6 - #7	8'-6"	7'-3"
16'-0"	10"	4'-8"	#6 at 32"	#6 at 32"	14"	8 - #6	8'-6"	7'-3"
18'-0"	10"	5'-4"	#6 at 24"	#6 at 24"	14"	8 - #7	9'-0"	7'-9"
20'-0"	10"	6'-0"	#6 at 24"	#6 at 16"	14"	8 - #8	9'-9"	8'-3"
22'-0"	10"	7'-8"	#6 at 16"	#6 at 16"	14"	8 - #9	10'-3"	8'-9"
24'-0"	10"	8'-0"	#6 at 16"	#6 at 16"	16"	8 - #8	10'-3"	8'-9"

WALL HT H	TYPE 19D CMU	DIM X	BAR D	BAR C	DIA	P BARS	DEPTH D1	DEPTH D2
6'-0"	8"	——	#6 at 48"	——	12"	6 - #5	6'-6"	5'-9"
8'-0"	8"	——	#6 at 48"	——	12"	6 - #6	7'-6"	6'-6"
10'-0"	4'-0"	——	#6 at 24"	——	12"	6 - #7	8'-3"	7'-0"
12'-0"	4'-0"	——	#6 at 32"	#6 at 32"	14"	8 - #7	8'-6"	7'-3"
14'-0"	4'-8"	——	#6 at 24"	#6 at 24"	14"	8 - #7	9'-3"	8'-0"
16'-0"	5'-4"	——	#6 at 16"	#6 at 16"	16"	6 - #8	9'-6"	8'-0"
18'-0"	7'-4"	——	#7 at 16"	#7 at 24"	16"	8 - #8	10'-0"	8'-6"
20'-0"	9'-8"	——	#8 at 16"	#7 at 16"	16"	8 - #9	10'-9"	9'-3"
22'-0"	12'-0"	——	#8 at 16"	#7 at 16"	16"	8 - #10	11'-6"	9'-9"
24'-0"	15'-0"	——	#8 at 16"	#7 at 16"	18"	8 - #10	11'-6"	9'-9"

NOTES

1. Wall to be designated "Noise Barrier Type 19A, 19B, 19C, or 19D. The Contract specifies actual wall designations.
2. For intermediate wall heights, use the next higher H.
3. All masonry shall be hollow unit and installed as running bond.
4. All masonry is to be specially inspected.
5. All Concrete Masonry Unit (CMU) cells the have vertical steel reinforcing bars or bond beam units shall be filled with grout.
6. Panels shall have at least 3 feet of level ground on each side.
7. Construction joints in the footing shall be spaced 120 feet maximum.
8. See "Masonry Wall Finishes and Details" sheet for masonry block finishes, special shapes, sizes and layouts.

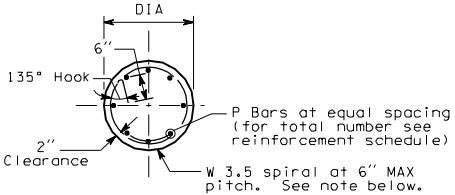

SECTION A-A

NOTE:
Spiral reinforcement shall be lapped 17" MIN. A 135° hook that is hooked around a longitudinal bar shall be used to terminate the ends of the spiral reinforcement at lapped splices and at the top and bottom of shaft

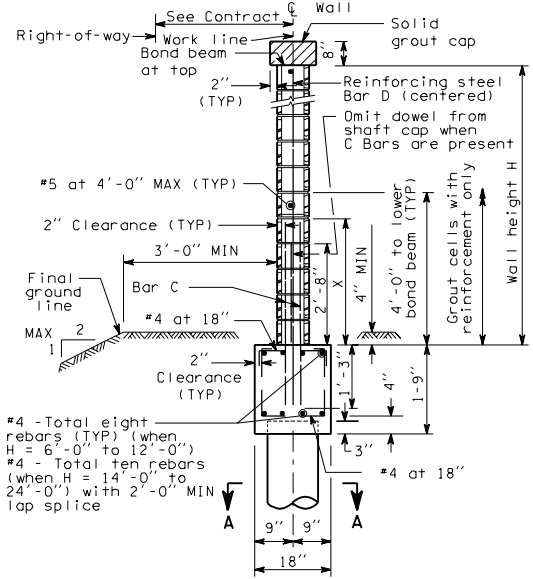

TYPICAL SECTION

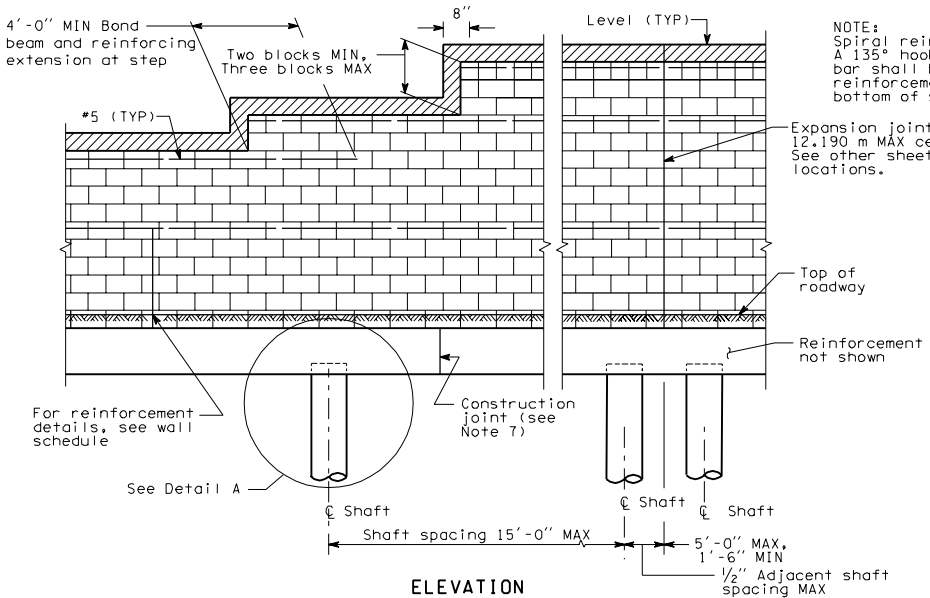

ELEVATION

NOISE BARRIER - TYPE 19

MASONRY WALL ON SHAFT WITH GRADE BEAM FOUNDATION

D-2s

03-14-97

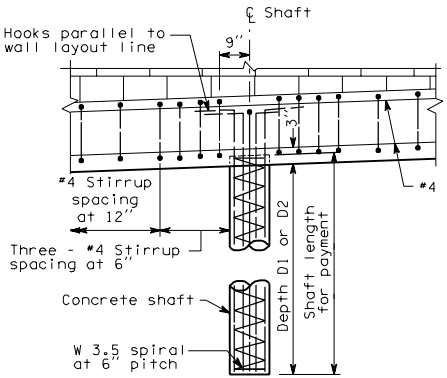

DETAIL A

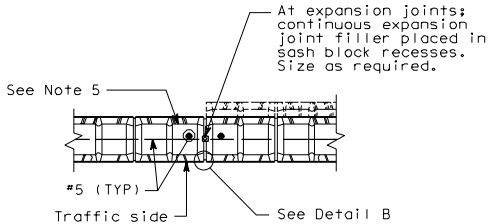

TYPICAL EXPANSION JOINT

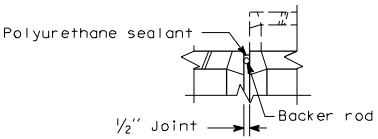

DETAIL B

Typical both sides of wall

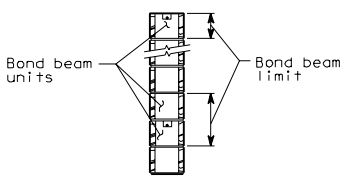

BOND BEAM DETAIL

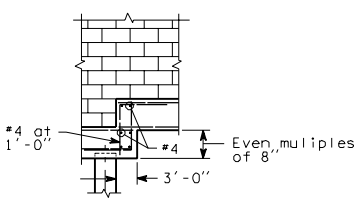

STEP DETAIL

NOISE BARRIER - TYPE 19

MASONRY WALL ON SHAFT WITH GRADE BEAM FOUNDATION

D-2s

03-14-97