WALL HT H	TYPE 15A				TYPE 15B				TYPE 15C				TYPE 15D				WALL HT H
	DEPTH D1	DEPTH D2	GLULAM †	PLYWOOD †	DEPTH D1	DEPTH D2	GLULAM †	PLYWOOD †	DEPTH D1	DEPTH D2	GLULAM †	PLYWOOD †	DEPTH D1	DEPTH D2	GLULAM †	PLYWOOD †	
6'-0"	3'-3"	3'-0"	1"	1¼"	3'-9"	3'-6"	1¼"	1½"	3'-6"	3'-3"	1⅛"	1⅜"	4'-0"	3'-6"	1½"	1⅝"	6'-0"
8'-0"	3'-6"	3'-3"	1¼"	1⅜"	4'-0"	3'-9"	1⅝"	1⅞"	3'-9"	3'-6"	1⅜"	1⅝"	4'-3"	3'-9"	1⅞"	2⅛"	8'-0"
10'-0"	4'-0"	3'-6"	1½"	1⅝"	4'-6"	4'-0"	1⅞"	2¼"	4'-0"	3'-9"	1⅝"	2"	4'-6"	4'-0"	2¼"	2½"	10'-0"
12'-0"	4'-3"	3'-9"	1⅝"	2"	4'-9"	4'-3"	2¼"	2⅝"	4'-6"	4'-0"	2"	2¼"	4'-9"	4'-3"	2½"	3"	12'-0"
14'-0"	4'-6"	4'-0"	2"	2¼"	5'-0"	4'-6"	2½"	3"	4'-9"	4'-3"	2¼"	2⅝"	5'-3"	4'-9"	2⅞"	3⅜"	14'-0"
16'-0"	4'-9"	4'-0"	2¼"	2½"	5'-3"	4'-9"	2⅞"	3¼"	5'-0"	4'-6"	2½"	3"	5'-6"	5'-0"	3¼"	3¾"	16'-0"
18'-0"	5'-0"	4'-3"	2½"	2⅞"	5'-6"	5'-0"	3¼"	3⅝"	5'-3"	4'-9"	2⅞"	3¼"	6'-0"	5'-3"	3⅝"	4¼"	18'-0"

NOTES

1. Wall to be designated Noise Barrier Type 15A, 15B, 15C or 15D. The Contract specifies actual wall designations.
2. For intermediate wall heights not listed use the next higher H.
3. Panels shall have at least 3 feet of level ground on each side.
4. Plywood and Glulam panels and all lumber to be pressure preservative treated.
5. The Contract shall specify actual foundation requirements D1 or D2.

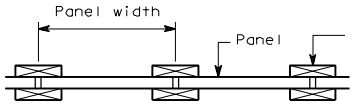

PLAN

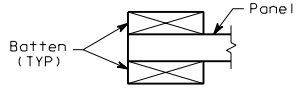

SECTION A-A

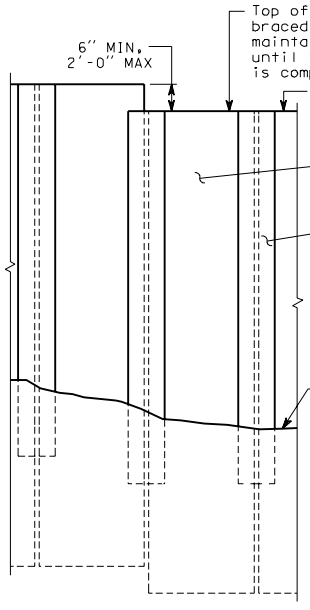

ELEVATION

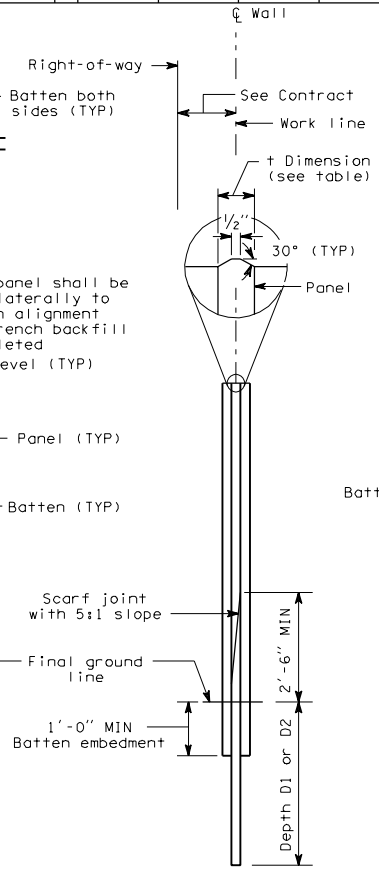

TYPICAL SECTION

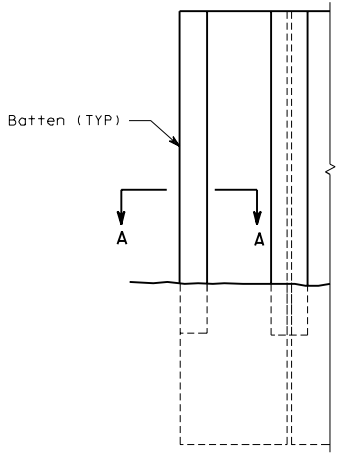

ELEVATION END DETAIL

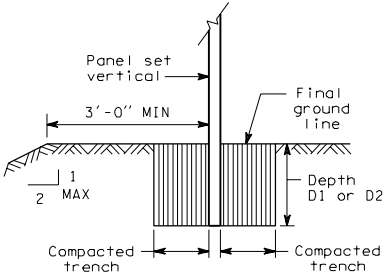

TRENCH FOOTING

NOISE BARRIER - TYPE 15

TIMBER PANEL WALL ON TRENCH FOOTING

D-2o 1 of 1

03-14-97