WALL HT H	TYPE 13A						TYPE 13B						WALL HT H
	W	X	BAR B and C	BAR E	BAR D	BAR J	W	X	BAR B and C	BAR E (mm)	BAR D	BAR J	
6'-0"	5'-6"	1"	#4 at 15"	#4 at 15"	#3 at 15"	#5 at 15"	5'-6"	1"	#4 at 15"	#4 at 15"	#3 at 15"	#5 at 15"	6'-0"
8'-0"	5'-3"	1"	#4 at 15"	#4 at 15"	#3 at 15"	#5 at 15"	5'-3"	1"	#4 at 15"	#4 at 15"	#3 at 15"	#5 at 15"	8'-0"
10'-0"	5'-3"	1"	#4 at 15"	#4 at 15"	#3 at 15"	#5 at 15"	5'-3"	1"	#4 at 15"	#4 at 15"	#3 at 15"	#5 at 15"	10'-0"
12'-0"	5'-0"	1"	#4 at 15"	#4 at 15"	#3 at 15"	#5 at 15"	5'-0"	1"	#4 at 10"	#4 at 10"	#3 at 10"	#5 at 10"	12'-0"
14'-0"	4'-9"	1"	#4 at 11"	#4 at 11"	#3 at 11"	#5 at 11"	5'-0"	1"	#4 at 12"	#5 at 12"	#4 at 12"	#5 at 12"	14'-0"
16'-0"	5'-0"	10"	#4 at 12"	#5 at 12"	#4 at 12"	#5 at 12"	5'-0"	10"	#4 at 10"	#5 at 10"	#4 at 10"	#5 at 10"	16'-0"
18'-0"	5'-0"	10"	#4 at 10"	#5 at 10"	#4 at 10"	#5 at 10"	5'-3"	1'-6"	#4 at 12"	#5 at 12"	#5 at 12"	#5 at 12"	18'-0"

WALL HT H	TYPE 13C						TYPE 13D						WALL HT H
	W	X	BAR B and C	BAR E	BAR D	BAR J	W	X	BAR B and C	BAR E	BAR D	BAR J	
6'-0"	5'-6"	1"	#4 at 15"	#4 at 15"	#3 at 15"	#5 at 15"	5'-6"	1"	#4 at 15"	#4 at 15"	#3 at 15"	#5 at 15"	6'-0"
8'-0"	5'-3"	1"	#4 at 15"	#4 at 15"	#3 at 15"	#5 at 15"	5'-3"	1"	#4 at 15"	#4 at 15"	#3 at 15"	#5 at 15"	8'-0"
10'-0"	5'-3"	1"	#4 at 15"	#4 at 15"	#3 at 15"	#5 at 15"	5'-3"	1"	#4 at 12"	#4 at 12"	#3 at 12"	#5 at 12"	10'-0"
12'-0"	5'-0"	1"	#4 at 12"	#4 at 12"	#3 at 12"	#5 at 12"	5'-0"	1"	#4 at 12"	#5 at 12"	#4 at 12"	#5 at 12"	12'-0"
14'-0"	4'-9"	1"	#4 at 12"	#5 at 12"	#4 at 12"	#5 at 12"	5'-3"	10"	#4 at 10"	#5 at 10"	#4 at 10"	#5 at 10"	14'-0"
16'-0"	5'-0"	10"	#4 at 10"	#5 at 10"	#4 at 10"	#5 at 10"	5'-6"	1'-6"	#4 at 13"	#5 at 13"	#5 at 13"	#5 at 13"	16'-0"
18'-0"	5'-0"	1'-0"	#4 at 10"	#5 at 10"	#4 at 10"	#5 at 10"	5'-9"	1'-9"	#4 at 9"	#5 at 9"	#5 at 9"	#5 at 9"	18'-0"

NOTES

1. Wall to be designated Noise Wall Type 13A, 13B, 13C or 13D. The Contract specifies actual wall designations.
2. For intermediate wall heights, use the next higher H.
3. Panels shall have at least 3 feet of level ground on each side.
4. Construction joints in the footing shall be spaced at 120 feet maximum.
5. All joints shall be in full contact and sealed.
6. The Contract specifies actual foundation requirements D1 or D2.

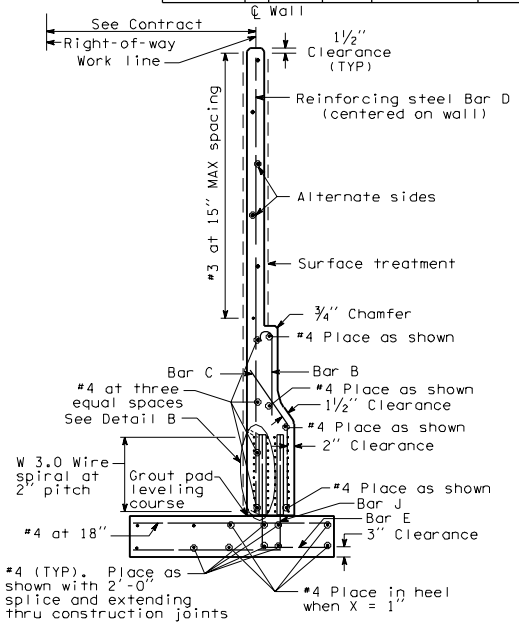

REINFORCEMENT SECTION

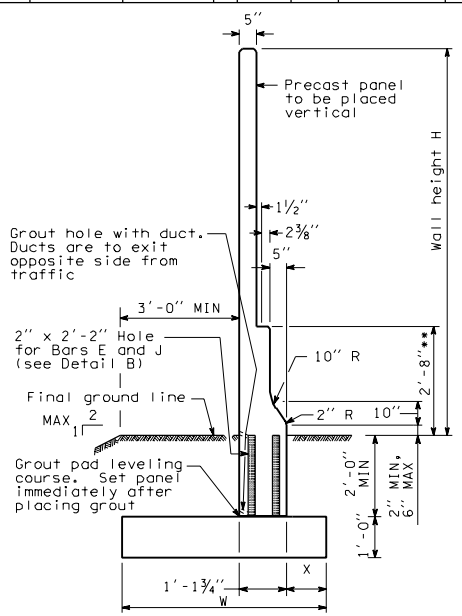

TYPICAL SECTION

**Height may vary if required to provide a smooth profile consistent with the roadway profile

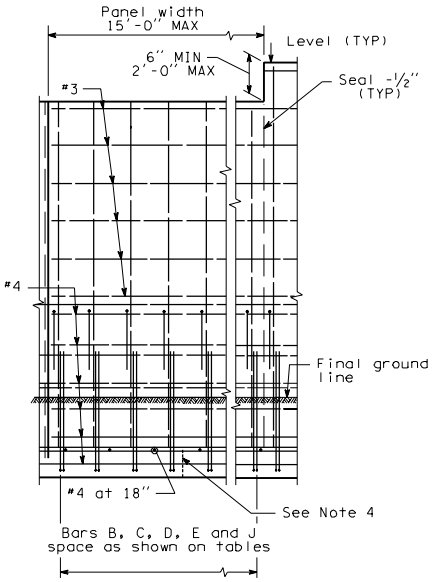

ELEVATION

NOISE BARRIER - TYPE 13

PRECAST CONCRETE WALL WITH TRAFFIC BARRIER ON SPREAD FOOTING

D-2m

03-14-97

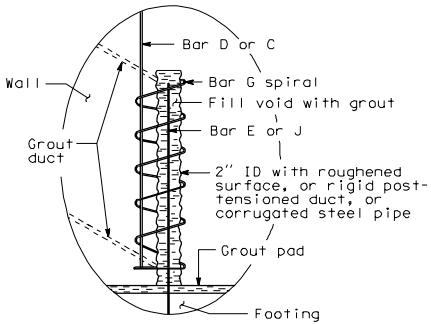

DETAIL B

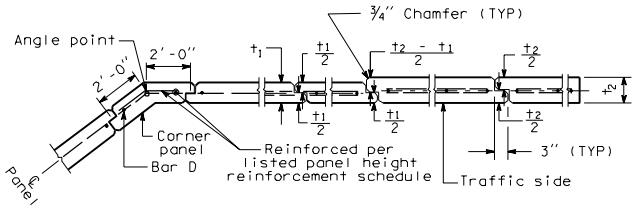

JOINT AND CORNER DETAIL

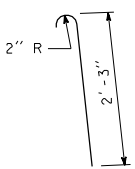

BAR B

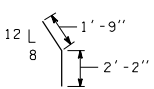

BAR C

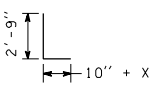

BAR E

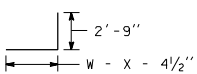

BAR J

NOISE BARRIER - TYPE 13

PRECAST CONCRETE WALL
WITH TRAFFIC BARRIER ON
SPREAD FOOTING

D-2m
03-14-97