WALL HT H	TYPE 11A							TYPE 11B							TYPE 11C							TYPE 11D							WALL HT H
	DEPTH D1	DEPTH D2	BAR A	BAR B	Y (mm)	PLATE THICK. T	ANCHOR BOLT DIA	DEPTH D1	DEPTH D2	BAR A	BAR B	Y	PLATE THICK. T	ANCHOR BOLT DIA	DEPTH D1	DEPTH D2	BAR A	BAR B	Y	PLATE THICK. T	ANCHOR BOLT DIA	DEPTH D1	DEPTH D2	BAR A	BAR B	Y	PLATE THICK. T	ANCHOR BOLT DIA	
6'-0"	5'-0"	4'-6"	4-#3	4-#5	2'-0"	1/2"	1"	5'-9"	5'-0"	4-#3	4-#5	2'-0"	1/2"	1"	5'-3"	4'-9"	4-#3	4-#5	2'-0"	1/2"	1"	6'-3"	5'-3"	4-#3	4-#5	2'-0"	1/2"	1"	6'-0"
8'-0"	5'-6"	5'-0"	4-#3	4-#5	2'-0"	1/2"	1"	6'-6"	5'-9"	4-#3	4-#5	2'-0"	5/8"	1"	6'-0"	5'-3"	4-#3	4-#5	2'-0"	5/8"	1"	7'-0"	6'-0"	4-#3	4-#5	2'-0"	3/4"	1"	8'-0"
10'-0"	6'-3"	5'-3"	4-#3	4-#5	2'-0"	5/8"	1"	7'-3"	6'-3"	4-#4	4-#5	2'-2"	3/4"	1"	6'-9"	5'-9"	4-#3	4-#5	2'-0"	3/4"	1"	8'-0"	6'-9"	4-#4	4-#5	2'-2"	7/8"	1"	10'-0"
12'-0"	6'-9"	5'-9"	4-#3	4-#5	2'-0"	3/4"	1"	8'-0"	6'-9"	4-#4	4-#6	2'-7"	1"	1"	7'-6"	6'-3"	4-#4	4-#5	2'-2"	1"	1"	8'-9"	7'-3"	4-#5	4-#6	2'-7"	1"	1"	12'-0"
14'-0"	7'-3"	6'-3"	4-#4	4-#5	2'-2"	3/4"	1"	8'-9"	7'-6"	4-#5	4-#6	2'-7"	1 1/8"	1"	8'-0"	6'-9"	4-#4	4-#6	2'-7"	1"	1"	9'-6"	8'-0"	4-#5	4-#7	3'-3"	1 1/4"	1"	14'-0"
16'-0"	7'-9"	6'-9"	4-#4	4-#6	2'-7"	7/8"	1"	9'-6"	8'-0"	4-#6	4-#7	3'-3"	1 1/4"	1"	8'-9"	7'-3"	4-#5	4-#6	2'-7"	1 1/8"	1"	10'-3"	8'-6"	4-#6	4-#8	4'-3"	1 1/4"	1"	16'-0"
18'-0"	8'-6"	7'-0"	4-#5	4-#6	2'-7"	1"	1"	10'-3"	8'-6"	4-#6	4-#8	4'-3"	1 3/8"	1"	9'-3"	7'-9"	4-#6	4-#7	3'-3"	1 1/8"	1"	11'-0"	9'-3"	4-#7	4-#8	4'-3"	1 3/8"	1"	18'-0"
20'-0"	9'-0"	7'-6"	4-#5	4-#7	3'-3"	1 1/4"	1"	10'-9"	9'-0"	4-#7	4-#8	4'-3"	1 3/8"	1"	10'-0"	8'-3"	4-#6	4-#8	4'-3"	1 1/4"	1"	11'-9"	9'-9"	4-#8	4-#9	5'-5"	1 1/2"	1 1/8"	20'-0"
22'-0"	9'-6"	8'-0"	4-#6	4-#7	3'-3"	1 3/8"	1"	11'-6"	9'-6"	4-#8	4-#9	5'-5"	1 1/2"	1"	10'-6"	8'-9"	4-#7	4-#8	4'-3"	1 3/8"	1"	12'-6"	10'-3"	4-#8	4-#10	6'-10"	1 5/8"	1 1/4"	22'-0"
24'-0"	10'-0"	8'-3"	4-#6	4-#8	4'-3"	1 1/2"	1"	12'-0"	10'-0"	4-#8	4-#10	6'-10"	1 5/8"	1"	11'-3"	9'-3"	4-#7	4-#9	5'-5"	1 1/2"	1"	13'-3"	11'-0"	4-#9	4-#11	8'-5"	1 3/4"	1 1/4"	24'-0"

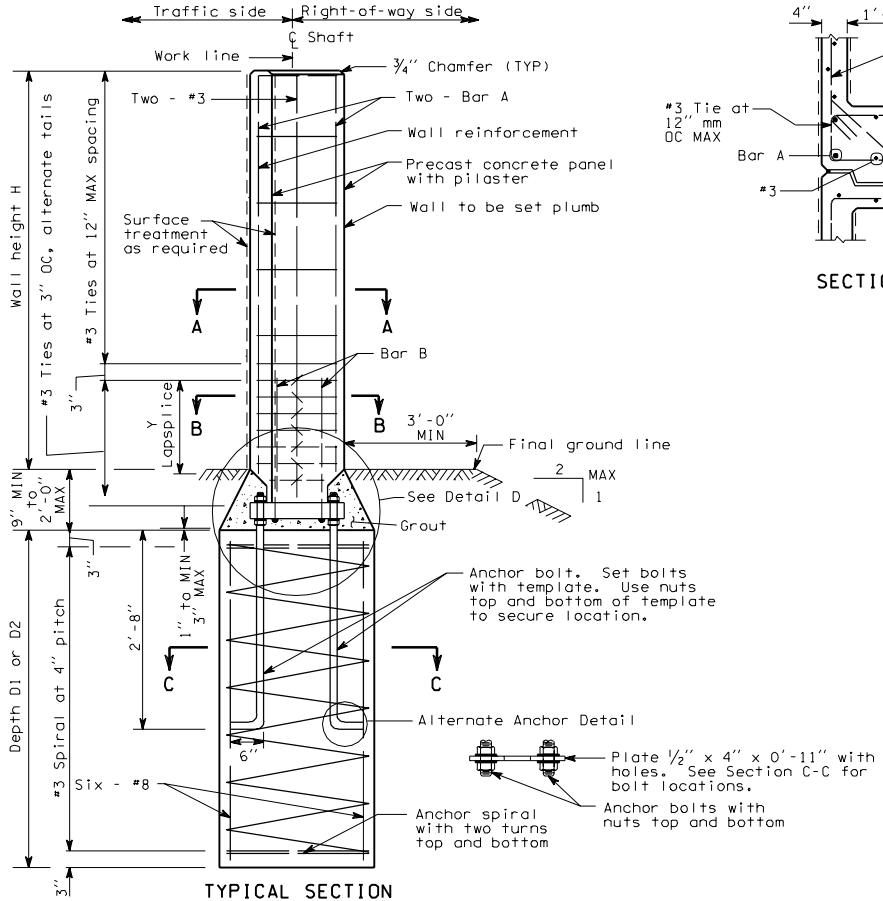

TYPICAL SECTION

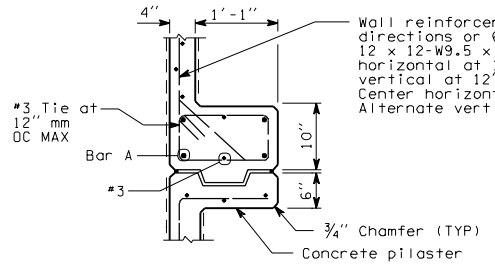

SECTION A-A

NOTES

1. Wall to be designated Noise Barrier Type 11A, 11B, 11C or 11D. The Contract specifies actual wall dimensions.
2. For intermediate wall heights, use the next higher H.
3. Panels shall have at least 3 feet of level ground on each side.
4. The Contract specifies actual foundation requirements D1 or D2.

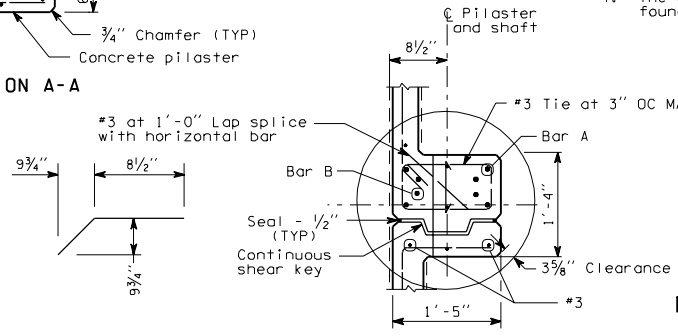

SECTION B-B

NOISE BARRIER - TYPE 11
PRECAST CONCRETE WALL ON SHAFT FOUNDATION

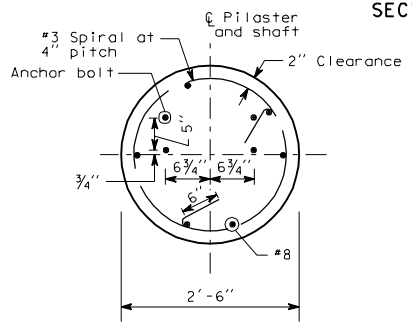

SECTION C-C

D-2k□

03-14-97

D	#5	#6	#7	#8	#9	#10	#11
A	1 1/16"	1 1/4"	1 7/16"	1 5/8"	1 13/16"	2"	2 3/16"
H	7/16"	17/32"	5/8"	11/16"	3/4"	13/16"	7/8"
F	11/16"	13/16"	15/16"	1 1/32"	1 5/32"	1 9/32"	1 13/32"

BOLT DIA	HOLE DIA	SLOT G
5/8"	3/4"	———
3/4"	7/8"	———
7/8"	1"	———
1"	1 1/8"	1 1/8" × 1 1/2"
1 1/8"	1 1/4"	1 1/4" × 1 5/8"
1 1/4"	1 5/8"	1 3/8" × 1 3/4"
1 3/8"	1 1/2"	———

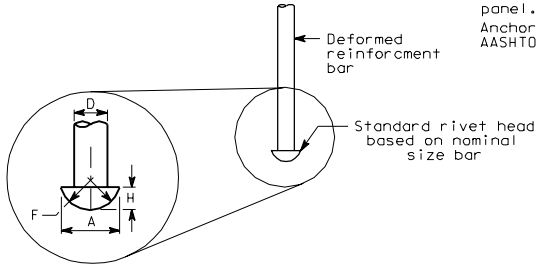

Button head shall bear firmly and uniform against base plate. Bar B shall be held secure during concrete placement to prevent gaps between button head and base plate.

BAR B

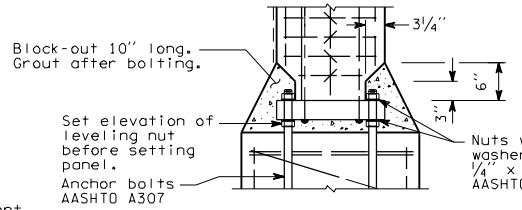

DETAIL D

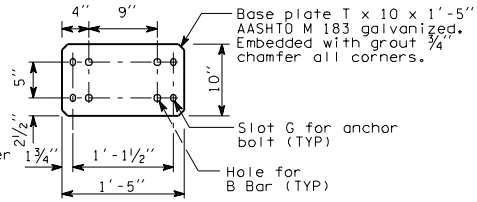

BASE PLATE DETAIL

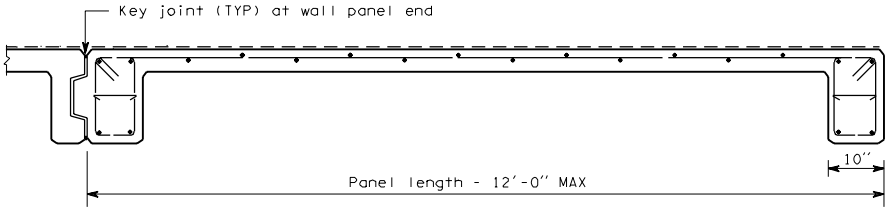

END PANEL

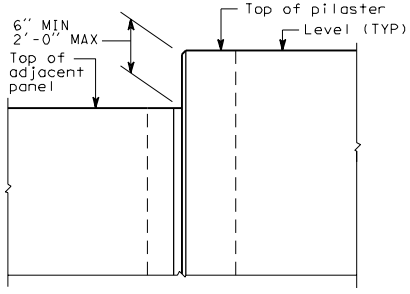

STEP DETAIL

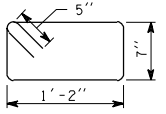

#3 Ties at 12" OC MAX

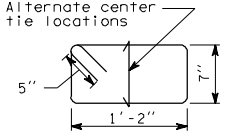

#3 Ties at 3" OC MAX

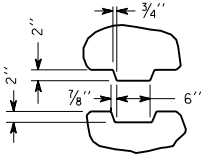

SHEAR-KEY

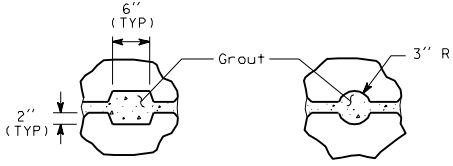

OPTIONAL SHEAR-KEY

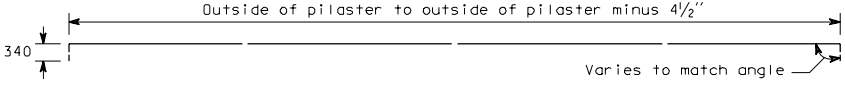

WALL REINFORCEMENT

NOISE BARRIER - TYPE 11

PRECAST CONCRETE WALL ON SHAFT FOUNDATION

D-2k

03-14-97

ANGLE (Degree)	DIMENSION A (Inches)
30	4½"
40	5½"
50	6½"
60	7¼"
70	7¾"
80	8"
90	9¼"

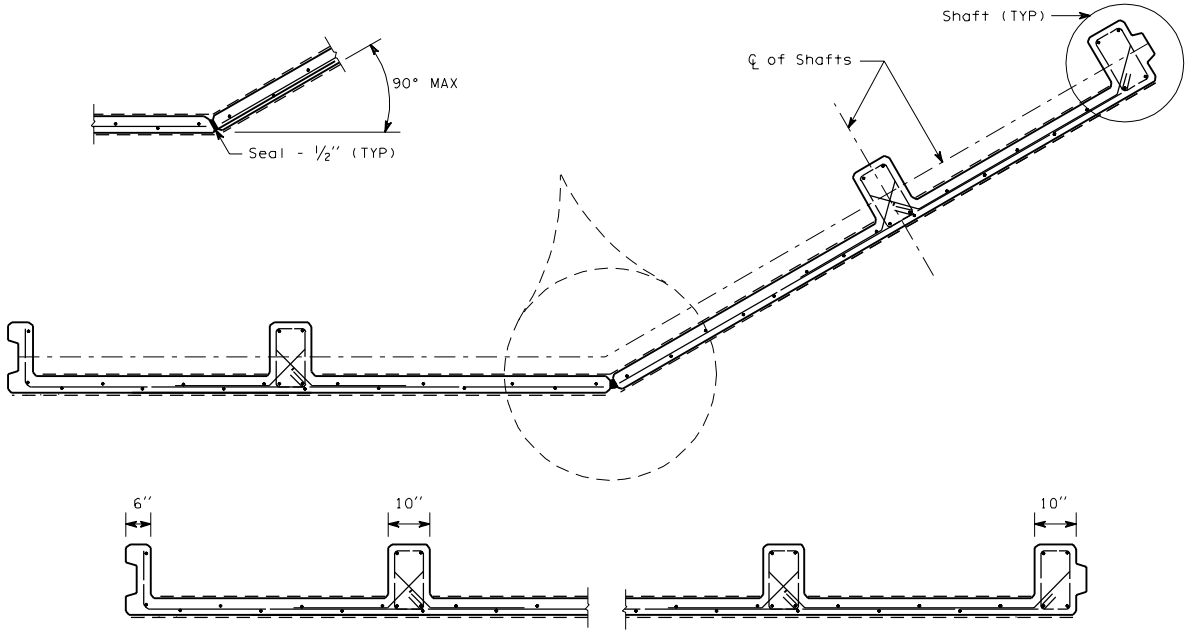

OPTIONAL ANGLE POINT

NOISE BARRIER - TYPE 11
PRECAST CONCRETE WALL ON SHAFT FOUNDATION

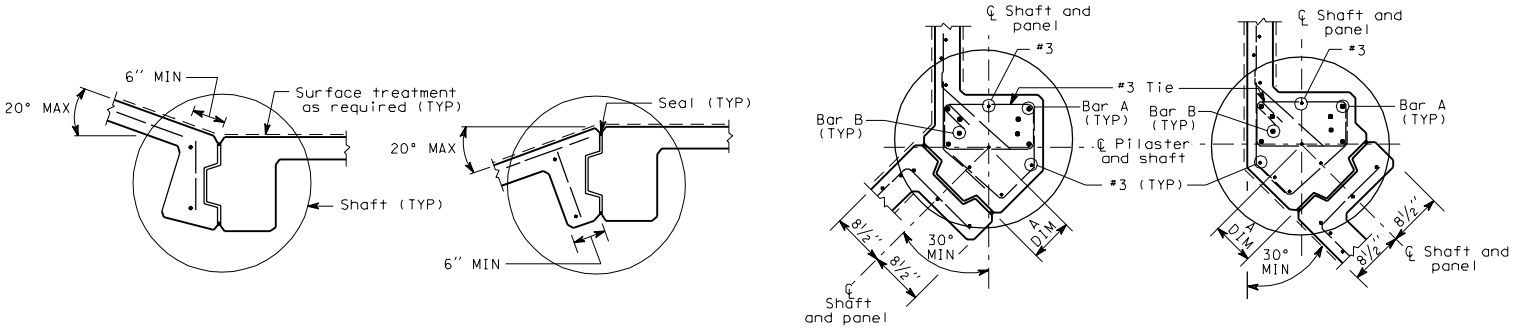

ANGLE POINT PLAN

D-2k

03-14-97