WALL HT H	TYPE 8A				TYPE 8B				TYPE 8C				TYPE 8D				WALL HT H
	WALL THICK T	DEPTH D1	DEPTH D2	BAR D	WALL THICK T	DEPTH D1	DEPTH D2	BAR D	WALL THICK T	DEPTH D1	DEPTH D2	BAR D	WALL THICK T	DEPTH D1	DEPTH D2	BAR D	
6'-0"	5"	3'-6"	3'-3"	#3 at 15"	5"	3'-9"	3'-6"	#3 at 13½"	5"	3'-6"	3'-3"	#3 at 15"	5"	3'-9"	3'-6"	#3 at 11"	6'-0"
8'-0"	5"	3'-9"	3'-3"	#3 at 13"	5"	4'-0"	3'-9"	#3 at 8½"	5"	3'-9"	3'-6"	#3 at 11"	5"	4'-3"	3'-9"	#4 at 12"	8'-0"
10'-0"	5"	4'-0"	3'-6"	#3 at 8½"	5"	4'-3"	4'-0"	#4 at 10½"	5"	4'-0"	3'-9"	#3 at 12½"	5"	4'-6"	4'-0"	#4 at 11"	10'-0"
12'-0"	5"	4'-3"	3'-9"	#4 at 12"	5"	4'-9"	4'-3"	#4 at 10"	5"	4'-6"	4'-0"	#4 at 10½"	5"	5'-0"	4'-6"	#5 at 12"	12'-0"
14'-0"	5"	4'-6"	4'-0"	#4 at 10½"	5"	5'-0"	4'-6"	#5 at 11"	5"	4'-9"	4'-3"	#4 at 9½"	5"	5'-3"	4'-9"	#5 at 8¾"	14'-0"
16'-0"	5"	4'-9"	4'-3"	#5 at 14"	5"	5'-3"	4'-9"	#5 at 8½"	5"	5'-0"	4'-6"	#5 at 11"	5"	5'-9"	5'-0"	#6 at 9½"	16'-0"
18'-0"	5"	5'-0"	4'-6"	#5 at 11"	5"	5'-6"	5'-0"	#6 at 9½"	5"	5'-3"	4'-9"	#5 at 8½"	6"	6'-0"	5'-3"	#6 at 9"	18'-0"
20'-0"	5"	5'-3"	4'-9"	#5 at 6"	6"	5'-9"	5'-3"	#6 at 9½"	5"	5'-6"	5'-0"	#5 at 6"	6"	6'-3"	5'-6"	#6 at 7½"	20'-0"
22'-0"	5"	5'-6"	5'-0"	#5 at 7"	6"	6'-0"	5'-6"	#6 at 8"	6"	5'-9"	5'-3"	#5 at 8"	7"	6'-6"	5'-9"	#6 at 7"	22'-0"
24'-0"	5"	5'-9"	5'-3"	#6 at 8"	7"	6'-3"	5'-9"	#6 at 6½"	6"	6'-0"	5'-6"	#5 at 6"	7"	6'-9"	6'-0"	#6 at 6"	24'-0"

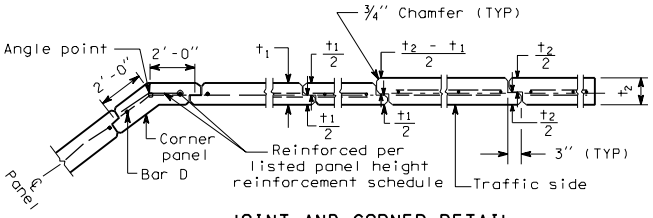

JOINT AND CORNER DETAIL

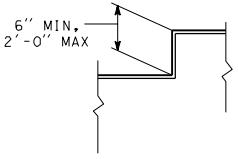

STEP IN PANEL TOP

NOTES

1. Wall to be designated Noise Wall Type 8A, 8B, 8C or 8D. The Contract specifies actual wall designations.
2. For intermediate wall heights, use the next higher H.
3. Panels shall have at least 3'-0" of level ground on each side.
4. Construction joints in the footing shall be spaced at 120 feet maximum.
5. All joints shall be in full contact and sealed.
6. The Contract specifies actual foundation requirements D1 or D2.

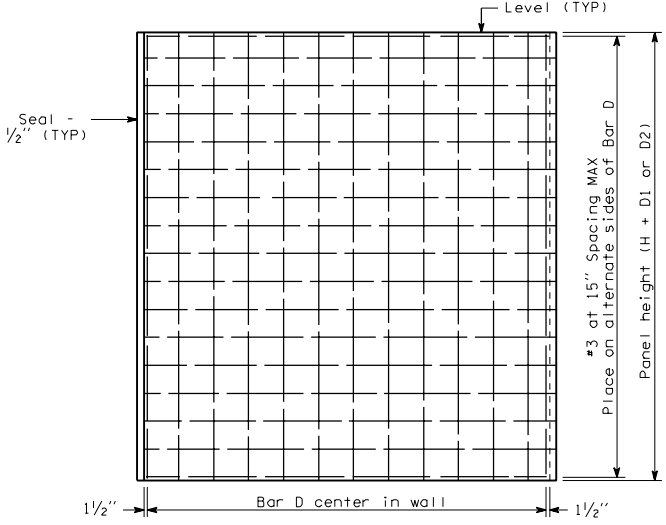

ELEVATION

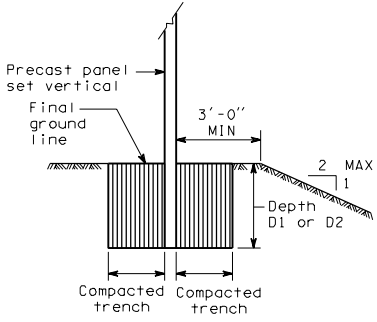

TRENCH FOOTING

There shall not be more than 1'-0" differential backfill height

NOISE BARRIER - TYPE 8

PRECAST CONCRETE WALL ON TRENCH FOOTING

D-2h 1 of 1

03-14-97