DIMENSIONS (ft)				FOOTING REINFORCEMENT										STEM REINFORCEMENT	MATERIAL QUANTITY		
				BAR E		BAR F			BAR K					BAR G (size #4)			
H (ft)	B	C_v	D		h	SIZE	SPAC.	LENGTH	SIZE	SPAC.	LENGTH	h	b	LENGTH	CONCRETE CY/LF	STEEL LBS/LF	H (ft)
5	5'-6"	2'-0"	1'-0"	3'-4"	2'-9"	#4	9"	3'-6"	#5	9"	7'-2"	4'-7"	3'-0"	3'-10"	0.36	26.3	5
6	5'-6"	2'-0"	1'-0"	3'-4"	2'-9"	#4	9"	3'-5"	#5	9"	8'-3"	5'-7"	3'-1"	4'-10"	0.41	29.5	6
7	5'-9"	2'-3"	1'-0"	3'-4"	2'-9"	#4	9"	3'-4"	#5	9"	9'-7"	6'-7"	3'-5"	5'-10"	0.47	31.8	7
8	5'-9"	2'-3"	1'-0"	3'-4"	2'-9"	#4	9"	3'-3"	#5	9"	10'-8"	7'-7"	3'-6"	6'-10"	0.53	35.0	8
9	6'-0"	2'-3"	1'-0"	3'-4"	2'-9"	#4	9"	3'-1"	#5	9"	12'-0"	8'-7"	3'-8"	7'-10"	0.60	38.5	9
10	6'-3"	2'-3"	1'-0"	3'-4"	2'-9"	#4	9"	3'-6"	#5	9"	12'-11"	9'-7"	3'-9"	8'-10"	0.67	40.6	10
11	6'-6"	2'-3"	1'-0"	3'-4"	2'-9"	#4	9"	3'-8"	#5	9"	14'-0"	10'-7"	3'-10"	9'-10"	0.75	44.7	11
12	7'-0"	2'-6"	1'-0"	3'-4"	2'-9"	#4	9"	3'-10"	#5	8"	14'-4"	11'-7"	4'-2"	10'-10"	0.84	49.6	12
13	7'-6"	2'-6"	1'-0"	3'-4"	2'-9"	#5	10"	4'-7"	#5	7"	15'-5"	12'-7"	4'-3"	11'-10"	0.93	57.5	13
14	7'-9"	2'-6"	1'-0"	3'-4"	2'-9"	#5	9"	4'-8"	#5	7"	17'-7"	13'-7"	4'-4"	12'-10"	1.02	63.9	14
15	8'-3"	2'-6"	1'-0"	3'-4"	2'-9"	#5	7"	4'-10"	#5	6"	17'-9"	14'-7"	4'-6"	13'-10"	1.12	73.4	15
16	8'-9"	2'-9"	1'-3"	3'-8"	3'-0"	#6	10"	5'-6"	#5	6"	20'-1"	15'-7"	4'-10"	14'-7"	1.29	80.0	16
17	9'-3"	3'-0"	1'-6"	3'-8"	3'-0"	#6	10"	5'-8"	#5	6"	21'-5"	16'-7"	5'-2"	15'-7"	1.46	84.8	17
18	9'-9"	3'-3"	1'-6"	3'-11"	3'-3"	#6	9"	5'-10"	#6	7"	22'-7"	17'-7"	5'-5"	16'-4"	1.58	100.9	18
19	10'-0"	3'-6"	1'-9"	3'-11"	3'-3"	#6	9"	6'-3"	#6	6"	24'-0"	18'-7"	5'-10"	17'-4"	1.77	118.1	19
20	10'-9"	3'-6"	1'-9"	4'-2"	3'-6"	#6	8"	6'-5"	#6	6"	25'-2"	19'-7"	6'-0"	18'-1"	1.91	124.0	20
21	11'-3"	3'-9"	2'-0"	4'-5"	3'-9"	#6	8"	6'-10"	#7	1'-2"	17'-8"	11'-11"	6'-4"	18'-10"	2.12	133.8	21
22	11'-9"	4'-0"	2'-0"	4'-5"	3'-9"	#6	7"	7'-0"	#7	1'-1"	18'-5"	12'-4"	6'-8"	19'-10"	2.26	148.5	22
23	12'-3"	4'-3"	2'-3"	4'-8"	4'-0"	#6	7"	7'-2"	#7	1'-0"	19'-2"	12'-10"	7'-0"	20'-7"	2.49	161.3	23
24	12'-9"	4'-3"	2'-3"	4'-8"	4'-0"	#6	6"	7'-7"	#8	1'-2"	20'-7"	14'-2"	7'-1"	21'-7"	2.64	188.5	24
25	13'-3"	4'-6"	2'-6"	4'-11"	4'-3"	#6	6"	7'-9"	#8	1'-1"	21'-7"	14'-9"	7'-6"	22'-4"	2.89	205.0	25
26	13'-9"	4'-9"	2'-6"	4'-11"	4'-3"	#6	6"	7'-11"	#8	1'-0"	22'-2"	15'-1"	7'-11"	23'-4"	3.06	224.8	26
27	14'-3"	5'-0"	2'-9"	5'-2"	4'-6"	#6	6"	8'-1"	#9	1'-2"	24'-2"	16'-9"	8'-2"	24'-1"	3.33	253.9	27
28	14'-9"	5'-3"	3'-0"	5'-5"	4'-9"	#6	6"	8'-3"	#9	1'-1"	25'-0"	17'-3"	8'-6"	24'-10"	3.61	275.9	28
29	15'-3"	5'-6"	3'-3"	5'-8"	5'-0"	#6	6"	8'-5"	#9	1'-0"	25'-3"	17'-9"	8'-11"	25'-7"	3.90	299.0	29
30	16'-0"	5'-9"	3'-3"	5'-8"	5'-0"	#7	7"	9'-8"	#9	11"	26'-8"	18'-2"	9'-3"	26'-7"	4.12	340.3	30
31	16'-6"	6'-0"	3'-6"	5'-11"	5'-3"	#7	7"	9'-10"	#9	11"	27'-6"	18'-8"	9'-7"	27'-4"	4.43	352.3	31
32	17'-0"	6'-3"	3'-9"	6'-2"	5'-6"	#7	7"	10'-0"	#9	10"	28'-5"	19'-3"	9'-11"	28'-1"	4.76	390.0	32
33	17'-6"	6'-6"	4'-0"	6'-4"	5'-9"	#7	6"	10'-2"	#9	10"	29'-2"	19'-9"	10'-2"	28'-10"	5.09	406.4	33
34	18'-0"	6'-9"	4'-3"	6'-8"	6'-0"	#7	6"	10'-4"	#9	10"	30'-2"	20'-3"	10'-8"	29'-7"	5.44	417.8	34
35	18'-6"	7'-0"	4'-6"	6'-11"	6'-3"	#7	6"	10'-6"	#10	11"	32'-4"	22'-2"	11'-0"	30'-3"	5.79	491.0	35

BAR M					BAR J		
SIZE	SPAC.	LENGTH	h	b	SIZE	SPAC.	LENGTH
#7	1'-2"	10'-7"	4'-10"	6'-4"	#7	1'-2"	18'-11"
#7	1'-1"	10'-11"	4'-10"	6'-8"	#7	1'-1"	19'-11"
#7	1'-0"	11'-6"	5'-1"	7'-0"	#7	1'-0"	20'-8"
#8	1'-2"	12'-6"	6'-1"	7'-1"	#8	1'-0"	21'-8"
#8	1'-1"	13'-2"	6'-4"	7'-6"	#8	1'-1"	22'-5"
#8	1'-0"	13'-6"	6'-4"	7'-10"	#8	1'-0"	23'-5"
#9	1'-2"	15'-0"	7'-8"	8'-2"	#9	1'-2"	24'-2"
#9	1'-1"	15'-7"	7'-11"	8'-6"	#9	1'-1"	24'-11"
#9	1'-0"	15'-7"	8'-2"	8'-11"	#9	1'-0"	25'-9"
#9	11"	16'-7"	8'-2"	9'-3"	#9	11"	26'-6"
#9	11"	17'-2"	8'-5"	9'-7"	#9	11"	27'-6"
#9	10"	17'-9"	8'-8"	9'-11"	#9	10"	28'-3"
#9	10"	18'-3"	8'-11"	10'-2"	#9	10"	29'-0"
#9	10"	19'-0"	9'-2"	10'-8"	#9	10"	29'-9"
#10	11"	20'-10"	10'-9"	11'-0"	#10	11"	30'-6"

* If traffic barrier is used, add 0.100 CY of Concrete Class 4000 for Barrier Alternate 1. Add 0.123 CY of Concrete Class 4000 for Barrier Alternate 2 - L.F.

** Add 28 LBS of reinforcing steel for Barrier Alternate 1 or 19 LBS of reinforcing steel for Barrier Alternate 2 - per LF.

NOTES

1. All concrete including traffic barrier shall be Class 4000 except as noted.
2. For backfill requirements, see Standard Plan "D-4".
3. When Wall Type 1-SW (saltwater) is specified, the concrete cover over steel in the front face and the total wall thickness shall be increased by 1".
4. When Wall Type 1-SW (saltwater) is specified, concrete in the table column "Material Quantity" shall be increased by 0.003 x H CY/LF.
5. If Bar W1 interferes with the retaining wall form, it shall be field bent only at the angle point. The bar shall not be twisted.
6. Toe height for traffic barrier may vary, 2" MIN to 6" MAX.
7. Height of traffic barrier may vary if required to provide a profile pleasing to the eye.
8. Concrete in the 24 foot wall sections shall be placed separately between expansion joints with a minimum 12 hour period between concrete placement.

Bar	MIN Splice
#4	2'-0"
#5	2'-0"
#6	2'-1"
#7	2'-11"
#8	3'-9"
#9	4'-9"
#10	6'-1"

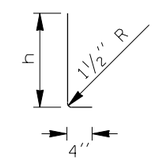

BAR E
At 1'-6" centers

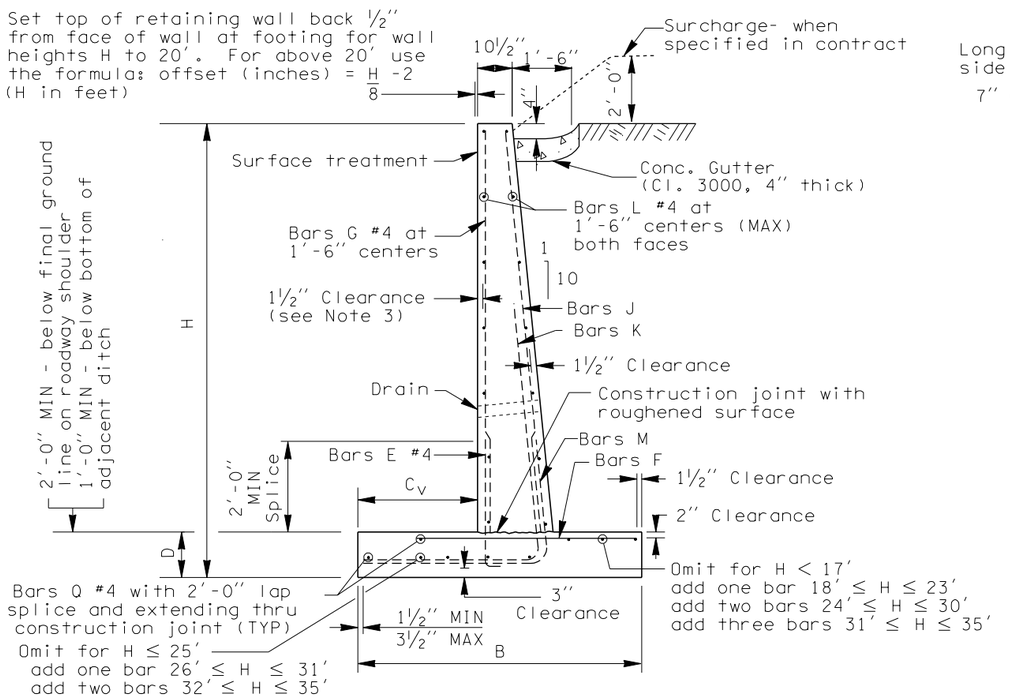

SECTION - VERTICAL FACE

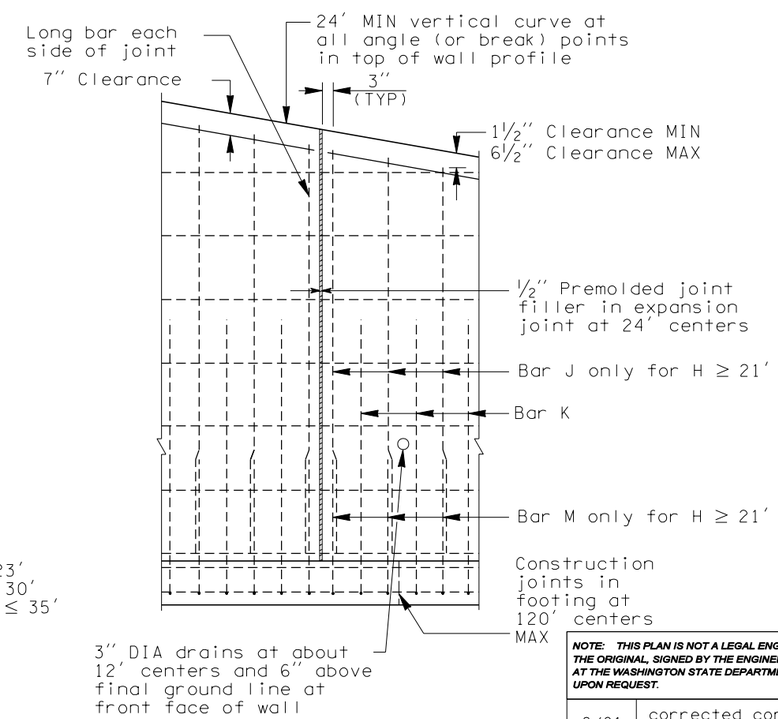

ELEVATION

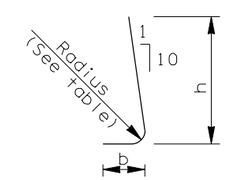

Bar	Radius
#5	9"
#6	11"
#7	1'-1"
#8	1'-3"
#9	1'-6"
#10	1'-8"

BARS K AND M

WALL DESIGN WITH VERTICAL FRONT FACE AND 2' SURCHARGE OR TRAFFIC BARRIER

JEROME A. WEIGEL
STATE OF WASHINGTON
14742
REGISTERED
PROFESSIONAL ENGINEER

EXPIRES JUNE 29, 2002

REINFORCED CONCRETE RETAINING WALL TYPE 1 AND 1 SW STANDARD PLAN D-1a

SHEET 1 OF 2 SHEETS

NOTE: THIS PLAN IS NOT A LEGAL ENGINEERING DOCUMENT BUT AN ELECTRONIC DUPLICATE. THE ORIGINAL, SIGNED BY THE ENGINEER AND APPROVED FOR PUBLICATION, IS KEPT ON FILE AT THE WASHINGTON STATE DEPARTMENT OF TRANSPORTATION. A COPY MAY BE OBTAINED UPON REQUEST.

DATE	REVISION	BY
8/01	corrected concrete quantity for barrier alternate 2	MAS

APPROVED FOR PUBLICATION

Harold J. Peterfeso — STATE DESIGN ENGINEER

01-23-02 — DATE

Washington State Department of Transportation

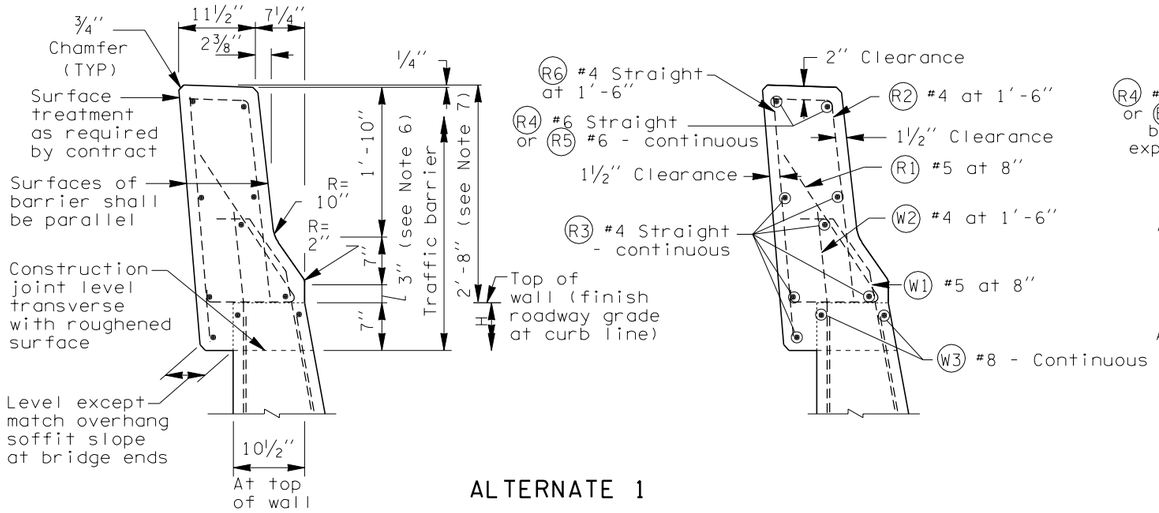

ALTERNATE 1

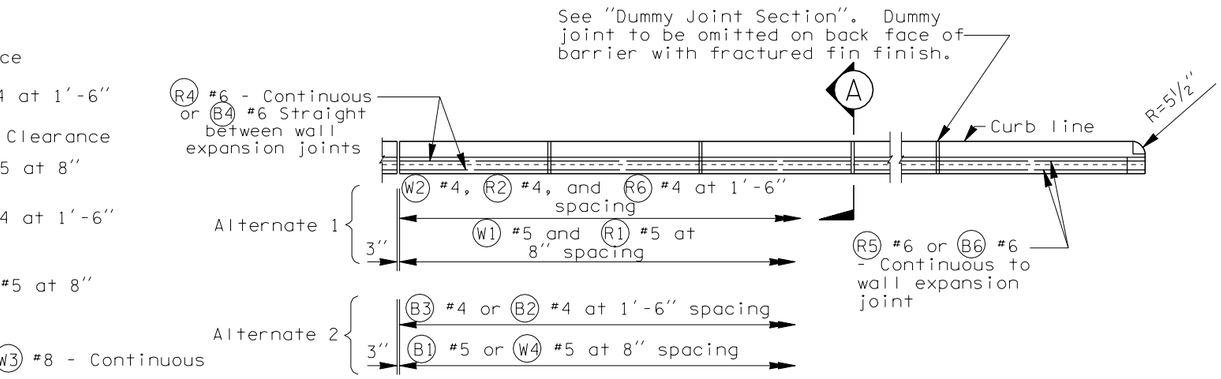

PLAN - TRAFFIC BARRIER

All chamfers 3/4"

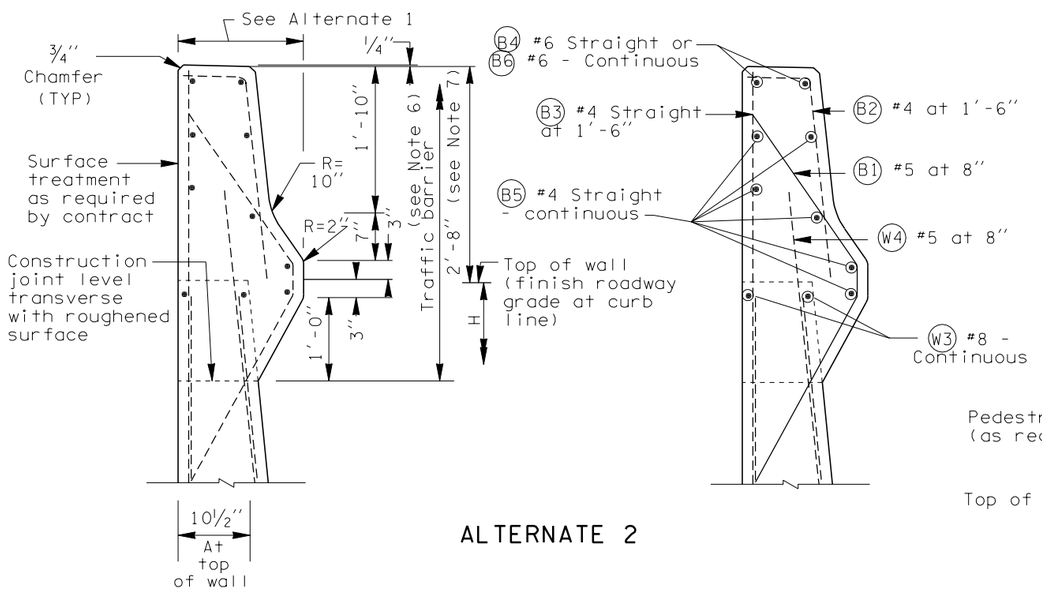

ALTERNATE 2

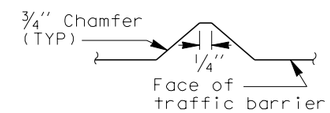

DUMMY JOINT SECTION

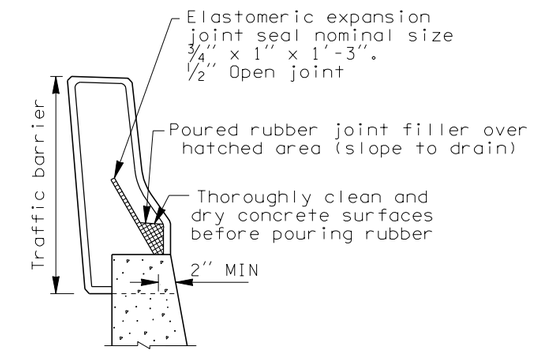

A SECTION

WALL DESIGN WITH VERTICAL FRONT FACE AND 2' SURCHARGE OR TRAFFIC BARRIER

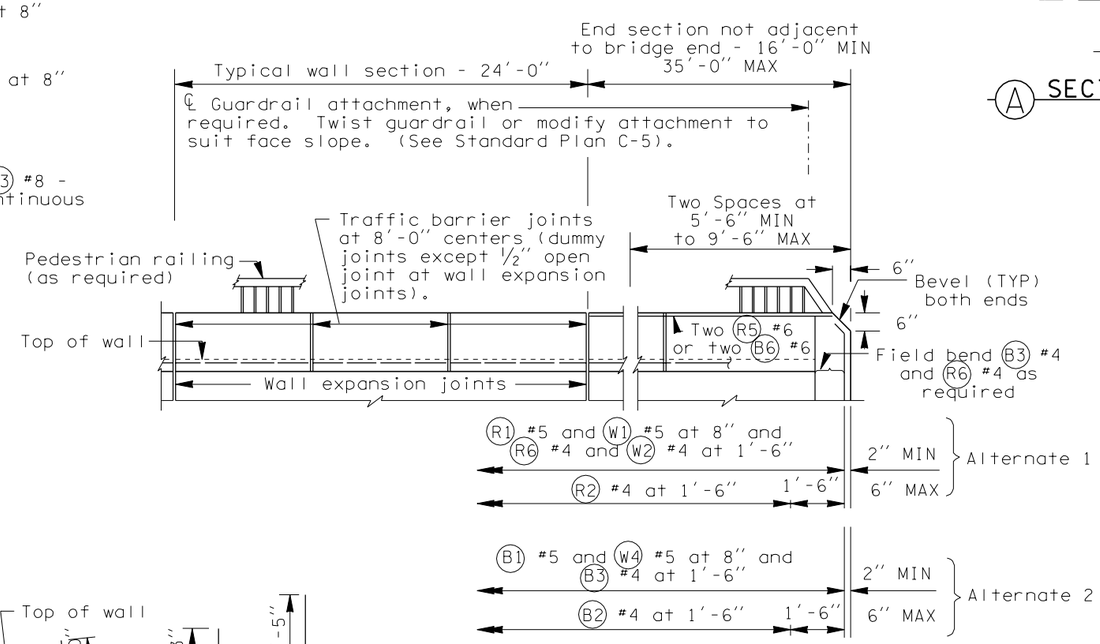

WALL ELEVATION

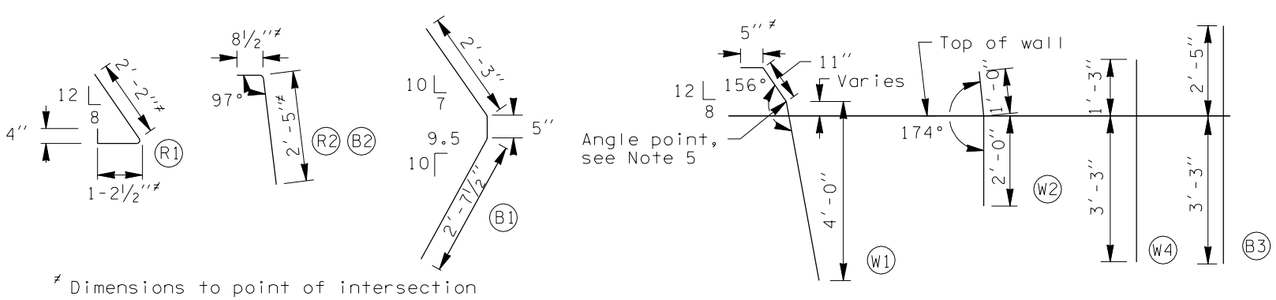

≠ Dimensions to point of intersection

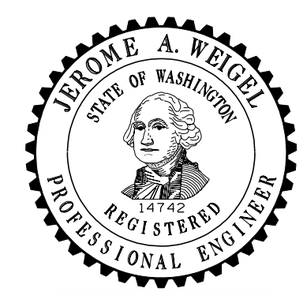

EXPIRES JUNE 29, 2002

REINFORCED CONCRETE RETAINING WALL TYPE 1 AND 1 SW STANDARD PLAN D-1a

SHEET 2 OF 2 SHEETS

NOTE: THIS PLAN IS NOT A LEGAL ENGINEERING DOCUMENT BUT AN ELECTRONIC DUPLICATE. THE ORIGINAL, SIGNED BY THE ENGINEER AND APPROVED FOR PUBLICATION, IS KEPT ON FILE AT THE WASHINGTON STATE DEPARTMENT OF TRANSPORTATION. A COPY MAY BE OBTAINED UPON REQUEST.

DATE	REVISION	BY
8/01	New Approval Date	MAS

APPROVED FOR PUBLICATION

Harold J. Peterfeso — STATE DESIGN ENGINEER

01-23-02 — DATE

Washington State Department of Transportation