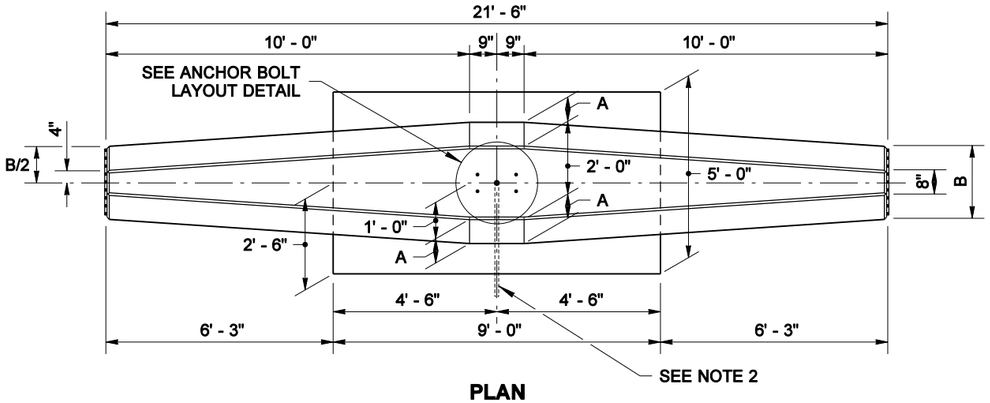

PLAN

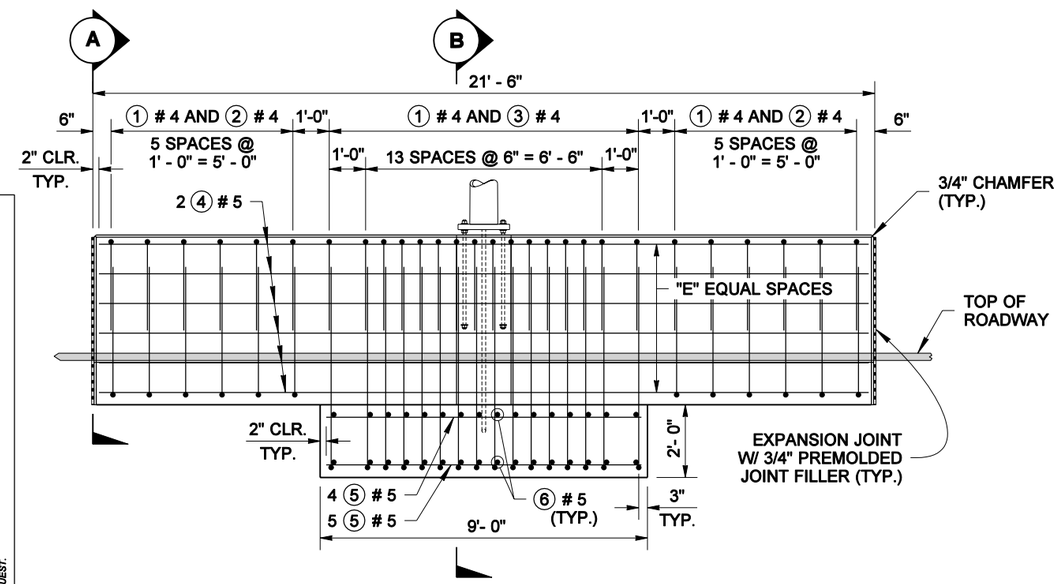

ELEVATION

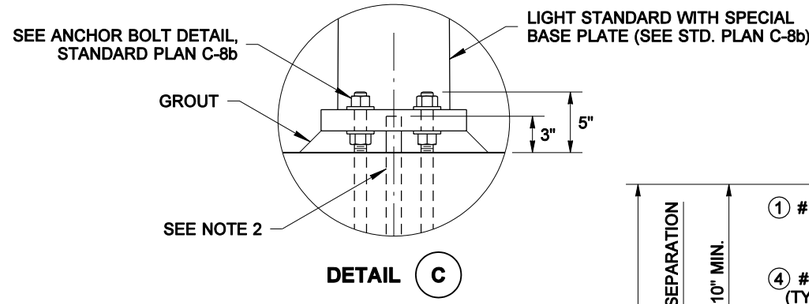

DETAIL (C)

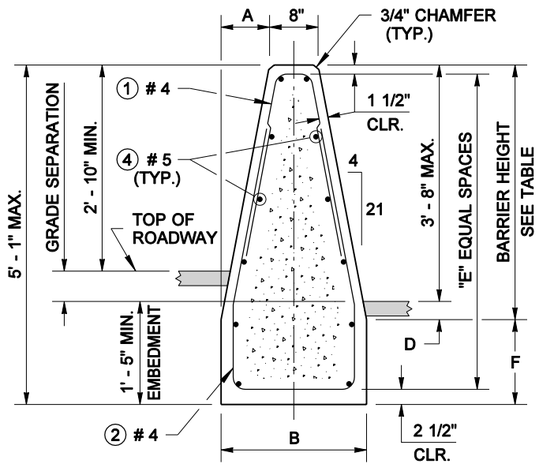

SECTION (A)

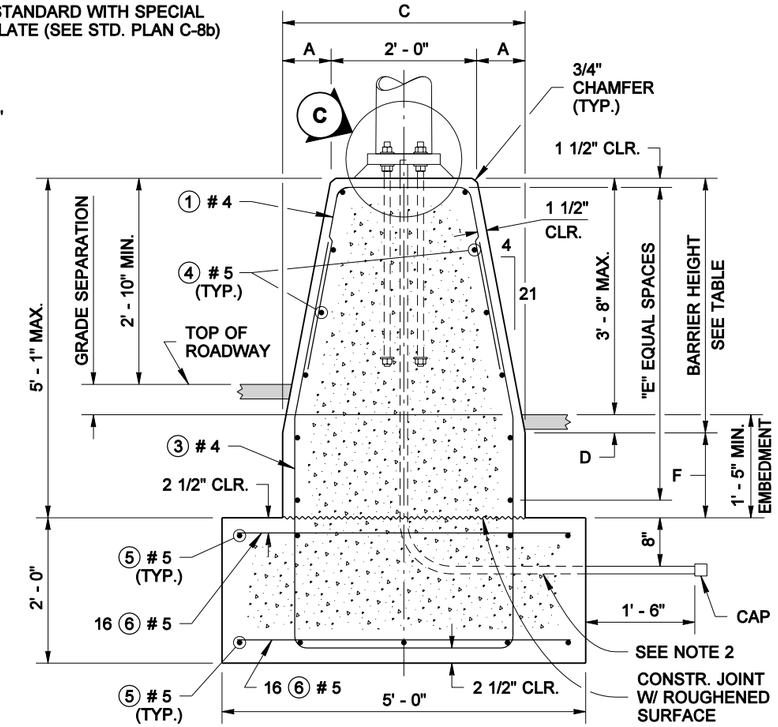

SECTION (B)

NOTES

1. WHEN CONNECTING BETWEEN CAST-IN-PLACE AND PRECAST SINGLE SLOPE BARRIER, PROVIDE A SLOT AND REBAR GRID AS SHOWN ON STANDARD PLAN C-13.
2. SEE THE CONTRACT PLANS FOR CONDUIT PLACEMENT.
3. CONCRETE SHALL BE CLASS 4000.

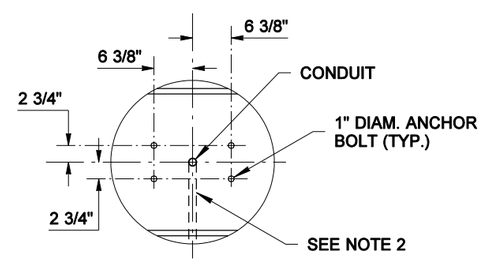

PLAN VIEW

ANCHOR BOLT LAYOUT DETAIL

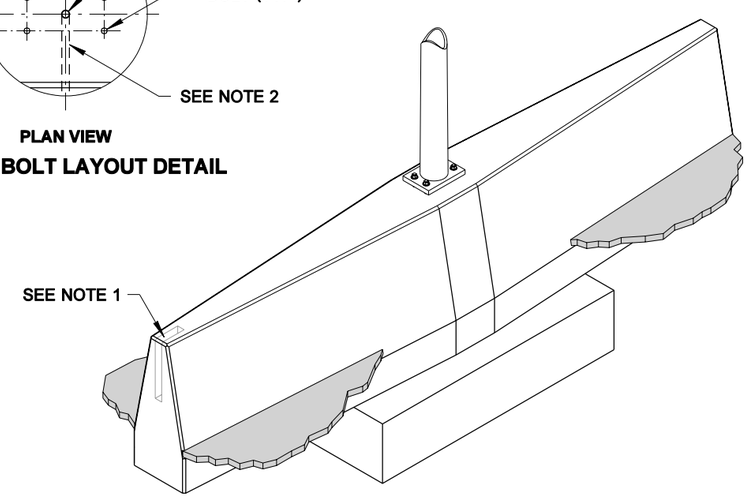

ISOMETRIC VIEW

ALL DIMENSIONS ARE OUT TO OUT
ALL BENDS ARE 2" RADIUS

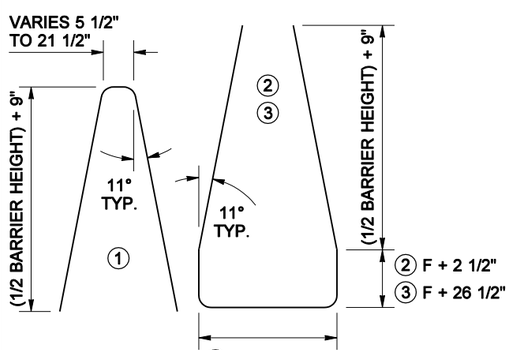

BAR LIST

MARK NO.	LOCATION	SIZE	QUANTITY
①	BARRIER ~ TOP VERTICAL	# 4	28
②	BARRIER ~ BOTTOM VERTICAL	# 4	12
③	FND. & BARRIER ~ VERTICAL	# 4	16
④	BARRIER ~ HORIZONTAL	# 5	"Q"
⑤	FOUNDATION	# 5	9
⑥	FOUNDATION	# 5	32

TABLE

GRADE SEPARATION	BARRIER HEIGHT	A	B	C	D	E	F	Q
0 TO 5"	3' - 6"	8"	3' - 0"	2' - 4"	3" MIN.	5	1' - 2"	12
UP TO 7"	4' - 0"	9 1/8"	3' - 2 1/4"	2' - 6 1/4"	7" MIN.	5	10"	12
UP TO 10"	4' - 6"	10 1/4"	3' - 4 1/2"	2' - 8 1/2"	10" MIN.	6	7"	14

NOTE: THIS PLAN IS NOT A LEGAL ENGINEERING DOCUMENT BUT AN ELECTRONIC DUPLICATE THE ORIGINAL, SIGNED BY THE ENGINEER AND APPROVED FOR PUBLICATION, IS KEPT ON FILE AT THE WASHINGTON STATE DEPARTMENT OF TRANSPORTATION. A COPY MAY BE OBTAINED UPON REQUEST.

EXPIRES NOVEMBER 14, 2004

SINGLE SLOPE CONCRETE BARRIER LIGHT STANDARD FOUNDATION STANDARD PLAN C-14h

SHEET 1 OF 1 SHEET

APPROVED FOR PUBLICATION

Harold J. Peterfeso — STATE DESIGN ENGINEER
12-02-03 — DATE

Washington State Department of Transportation