THOMAS SHEA

PLAN VIEW

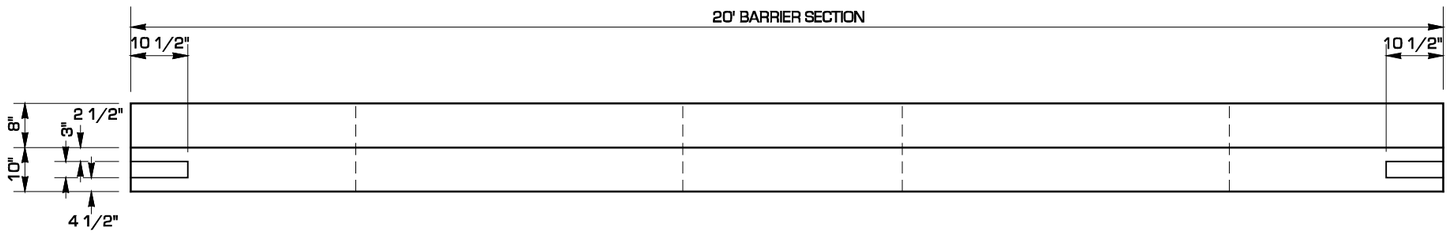

ELEVATION VIEW

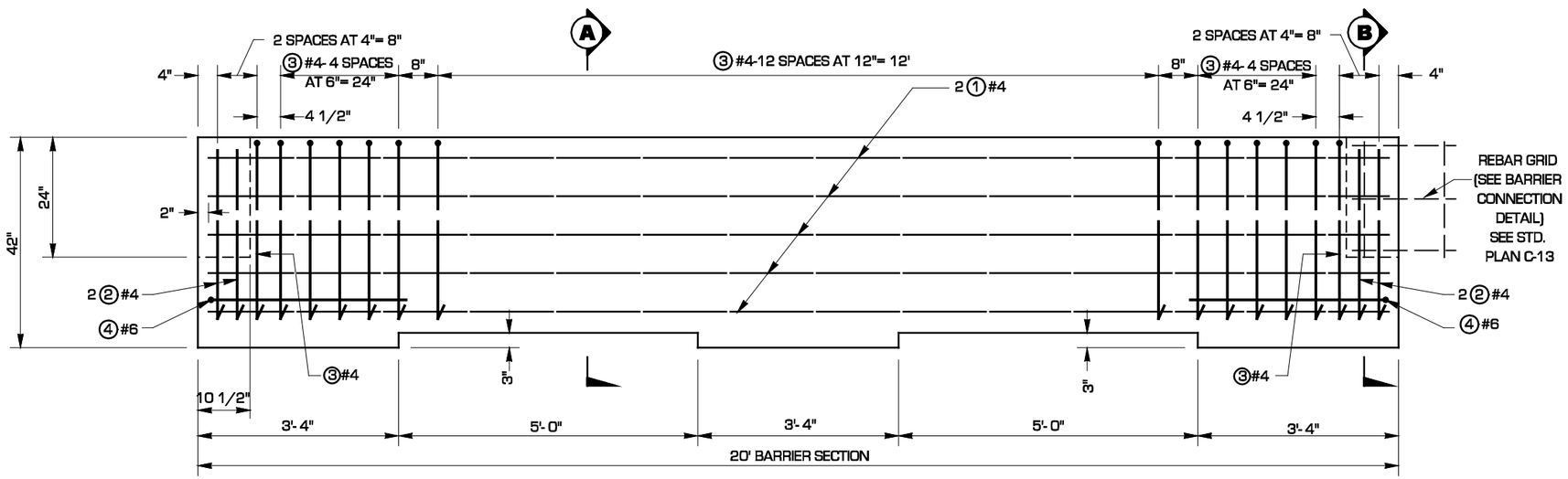

SECTIONS

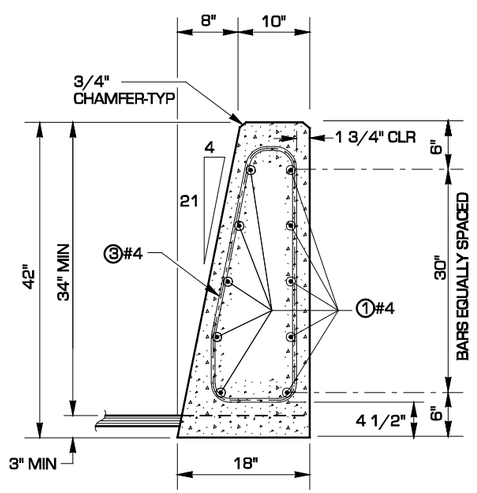

A SECTION

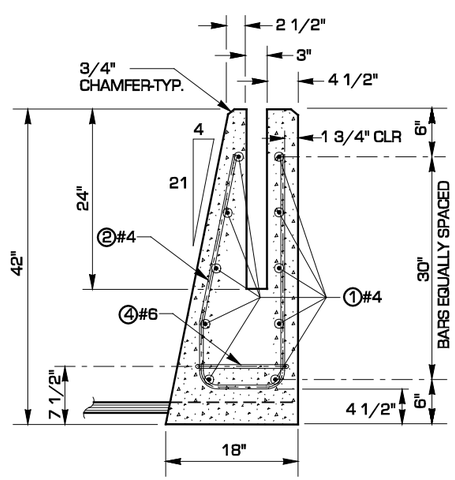

B SECTION

BAR LIST

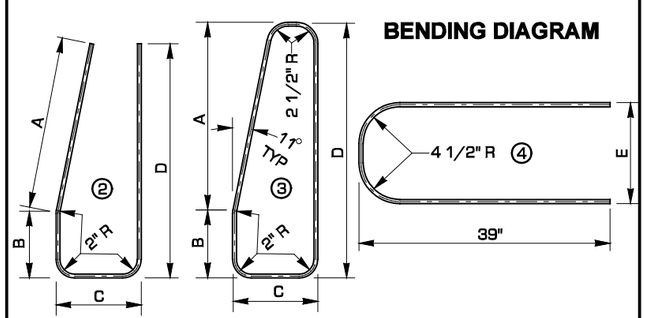

	MARK	SIZE	No.	LENGTH	A	B	C	D	E
42"	1	#4	10	19'-8" str.	-	-	-	-	-
	2	#4	8	70.5"	22.8"	8"	9.5"	30"	-
	3	#4	25	78.7	26.6"	8"	9.5"	32"	-
	4	#6	2	84.3"	-	-	-	-	9.5"

CLIFFORD E. MANSFIELD
STATE OF WASHINGTON
15224
REGISTERED PROFESSIONAL ENGINEER

EXPIRES MAY 3, 2000

SINGLE SLOPE BARRIER PRE-CAST TYPE SINGLE SIDED SECTION

STANDARD PLAN C-13b

NOTE: THIS PLAN IS NOT A LEGAL ENGINEERING DOCUMENT BUT AN ELECTRONIC DUPLICATE. THE ORIGINAL, SIGNED BY THE ENGINEER AND APPROVED FOR PUBLICATION, IS KEPT ON FILE AT THE WASHINGTON STATE DEPARTMENT OF TRANSPORTATION. A COPY MAY BE OBTAINED UPON REQUEST.

APPROVED FOR PUBLICATION

Clifford E. Mansfield *04-16-99*

DEPUTY STATE DESIGN ENGINEER — DATE

WASHINGTON STATE DEPARTMENT OF TRANSPORTATION
OLYMPIA, WASHINGTON