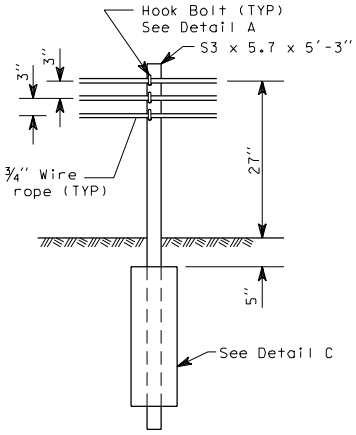

TYPE 1

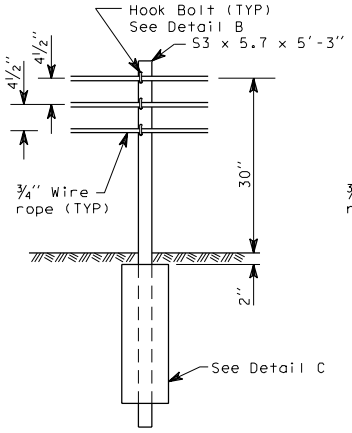

TYPE 2

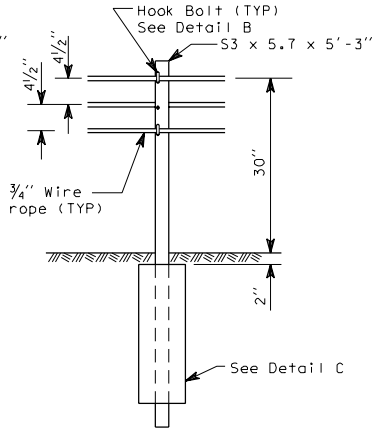

TYPE 3

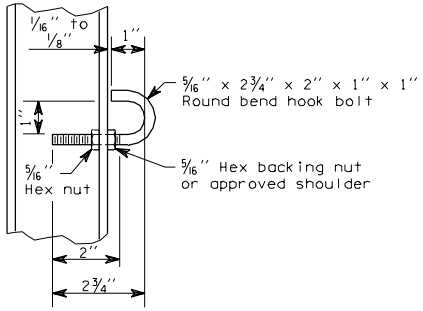

HOOK BOLT

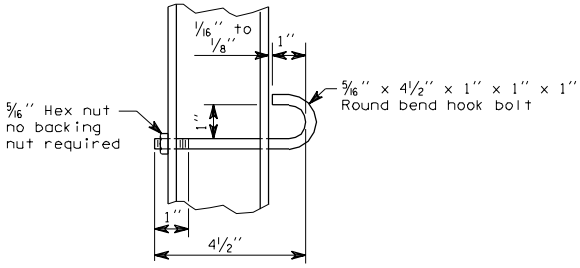

ALTERNATE HOOK BOLT

CABLE BARRIER

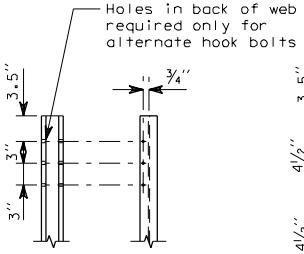

DETAIL A

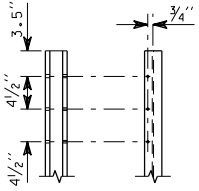

DETAIL B

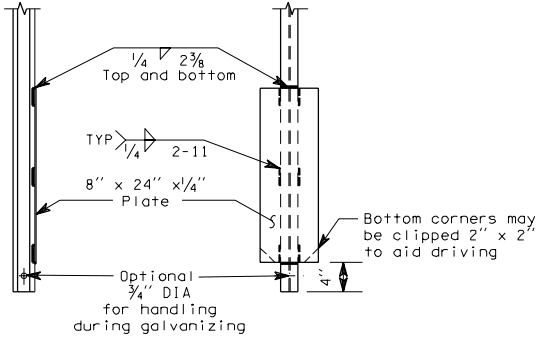

DETAIL C

C-11 1 of 1

05-30-97