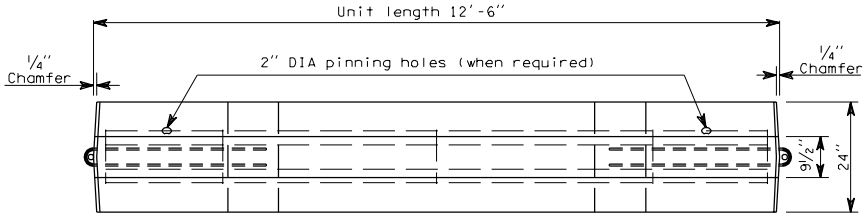

PLAN

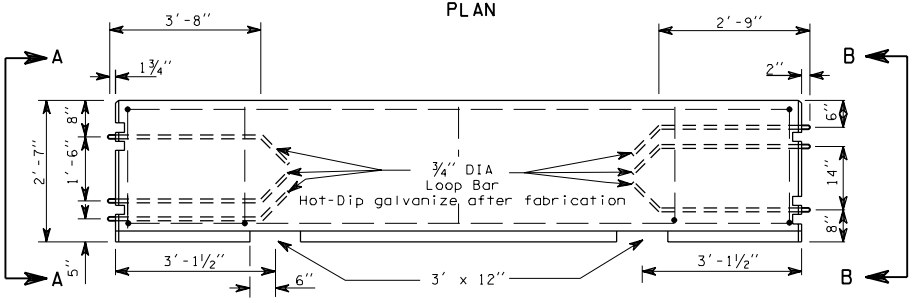

ELEVATION

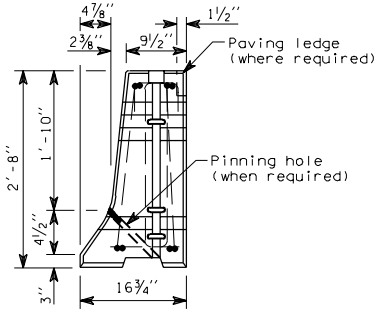

NARROW BASE

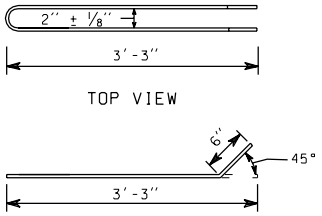

ALTERNATE LOOP BAR
3/4" DIA (A36)

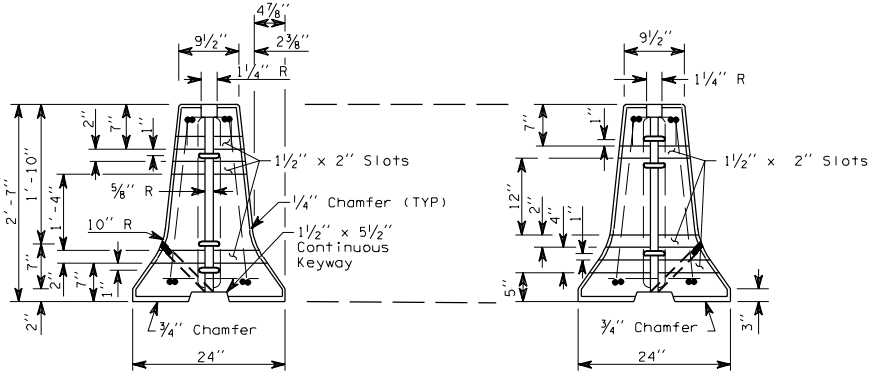

SECTION A-A

SECTION B-B

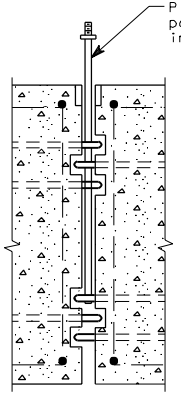

SECTION C-C

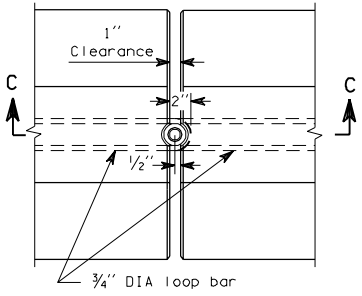

PLAN

ALTERNATIVE TEMPORARY
CONCRETE BARRIER

C-8d 1 of 1

07-25-97