NOTE

1. For details on loops, connecting pin, reinforcing steel, and terminal unit see Standard Plan Concrete Barrier Type 2.
2. See plans for surface treatment on back face face of barrier.
3. At the juncture between the Concrete Barrier Type 5 and the Bridge Barrier, cover the exposed foot of the Type 5 Barrier with an earth berm.

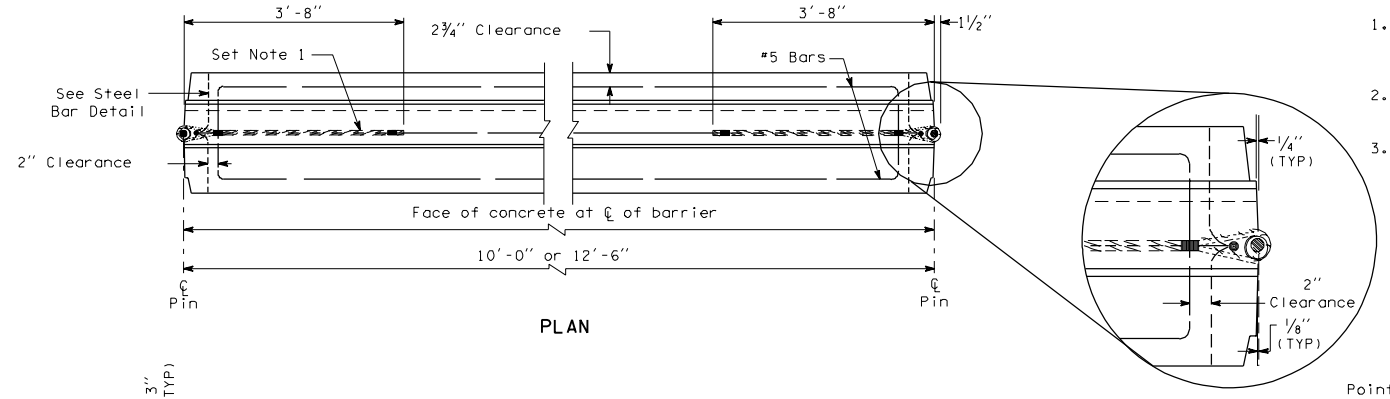

PLAN

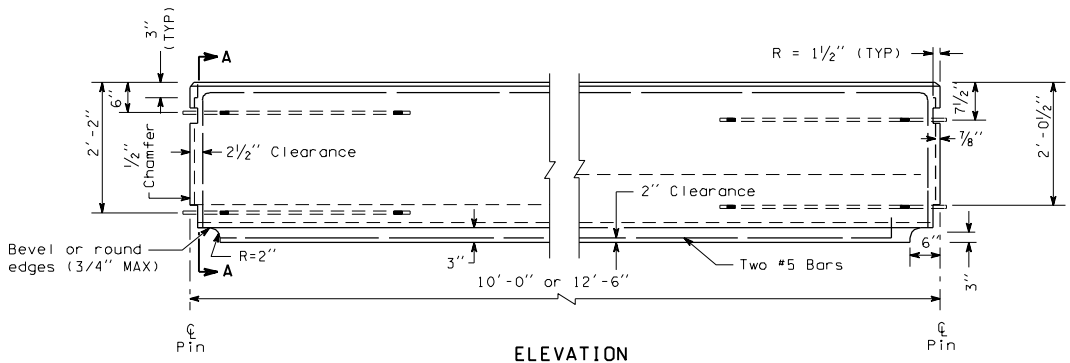

ELEVATION

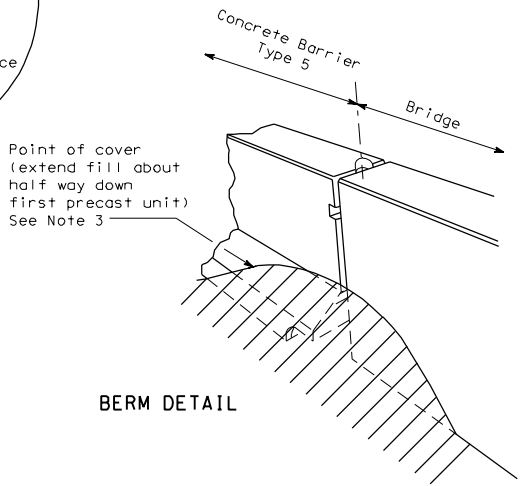

BERM DETAIL

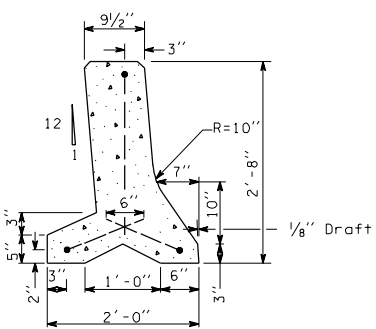

SECTION A-A

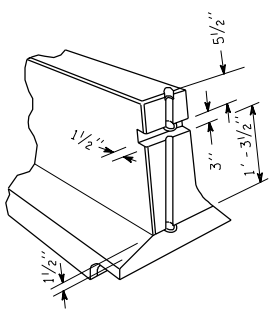

PERSPECTIVE VIEW

CONCRETE BARRIER TYPE 5

C-8c 1 of 1

05-30-97