NOTES

1. See Standard Plan C-1b for additional details.
2. One-way traffic layouts are identical to the two-way layout with the exception that only the posts trailing the span need to be CRT's with double blocks.

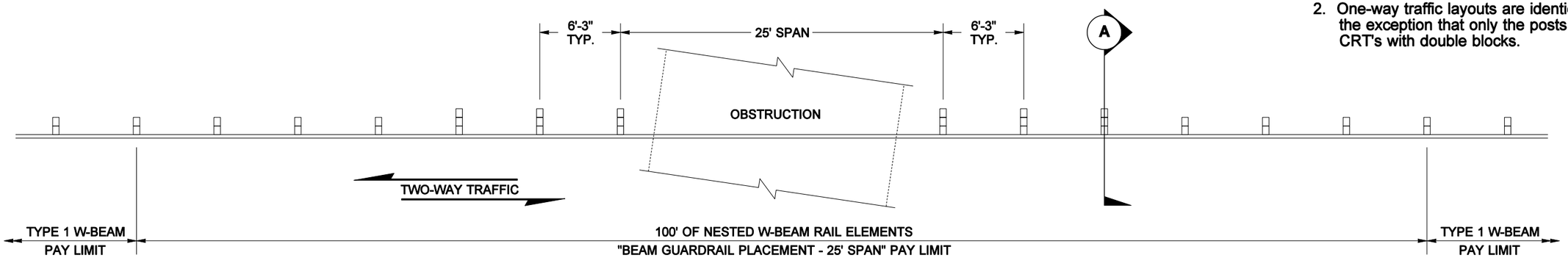

PLAN

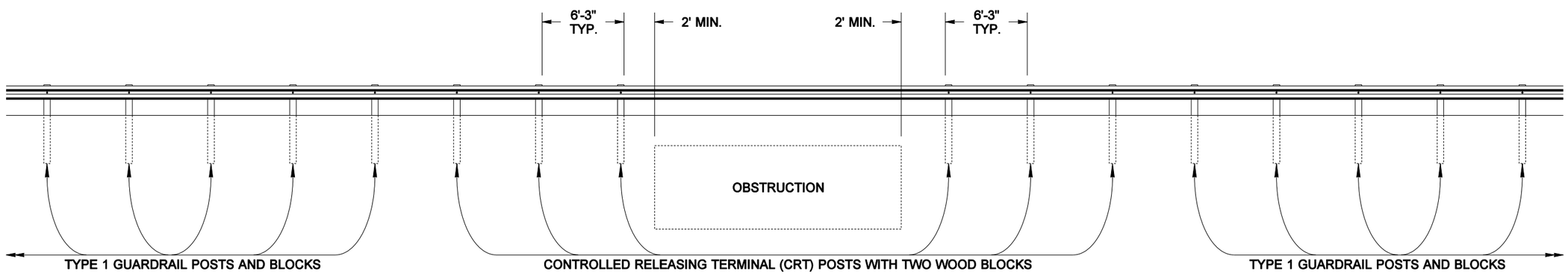

ELEVATION

CASE 21

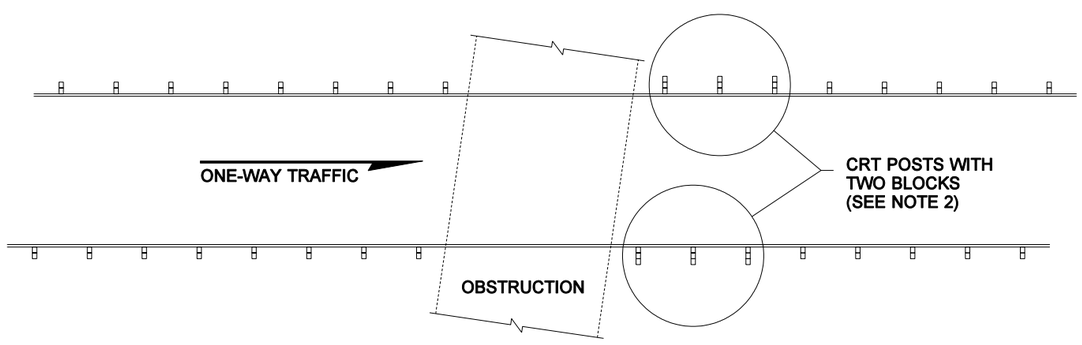

ONE-WAY TRAFFIC LAYOUT

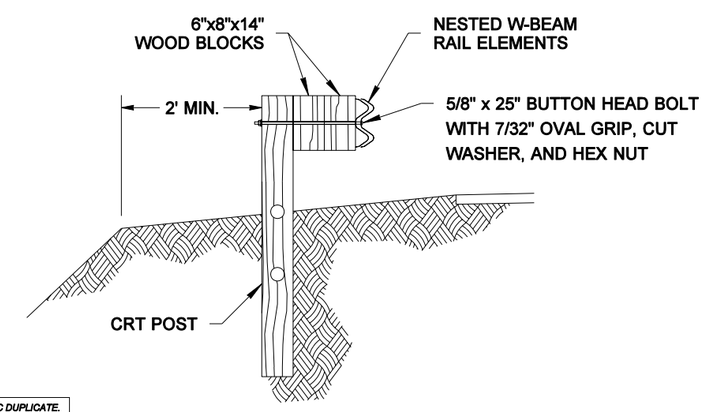

SECTION A

NOTE: THIS PLAN IS NOT A LEGAL ENGINEERING DOCUMENT BUT AN ELECTRONIC DUPLICATE. THE ORIGINAL, SIGNED BY THE ENGINEER AND APPROVED FOR PUBLICATION, IS KEPT ON FILE AT THE WASHINGTON STATE DEPARTMENT OF TRANSPORTATION. A COPY MAY BE OBTAINED UPON REQUEST.

EXPIRES MAY 3, 2002

GUARDRAIL PLACEMENT
25' SPAN
STANDARD PLAN C-2o

APPROVED FOR PUBLICATION

Clifford E. Mansfield — STATE DESIGN ENGINEER
07-13-01 — DATE

Washington State Department of Transportation