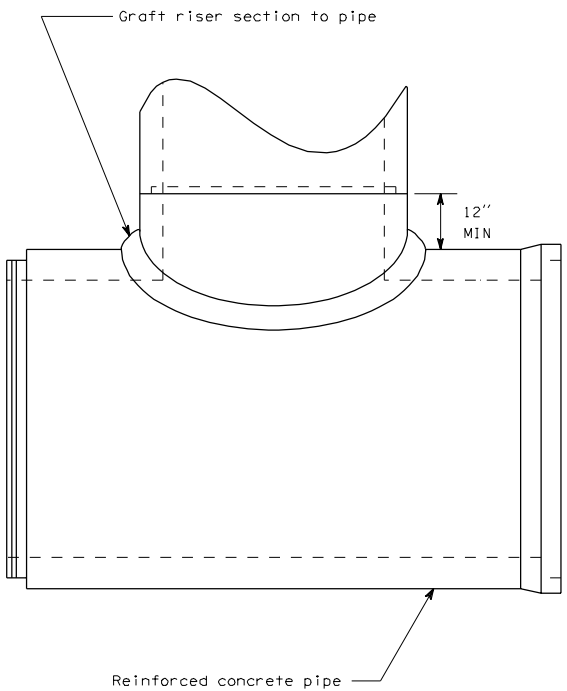

ELEVATION

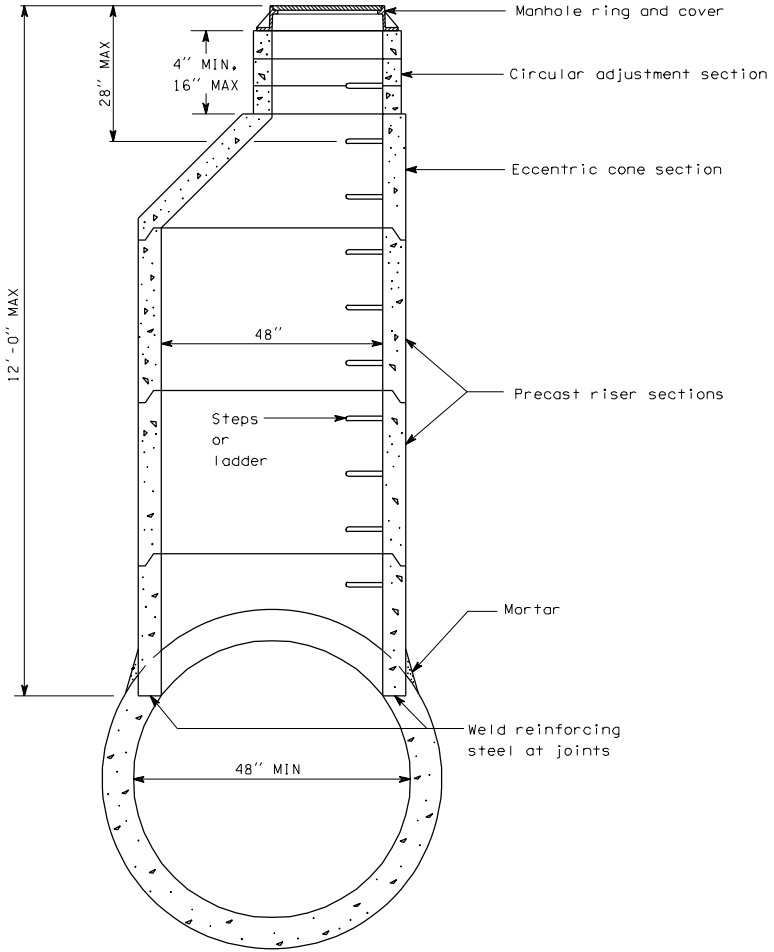

SECTION

MANHOLE TYPE 4