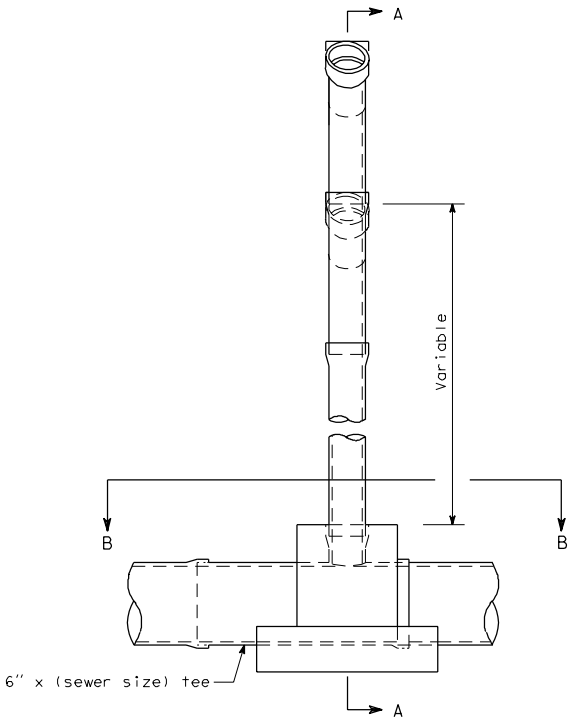

ELEVATION

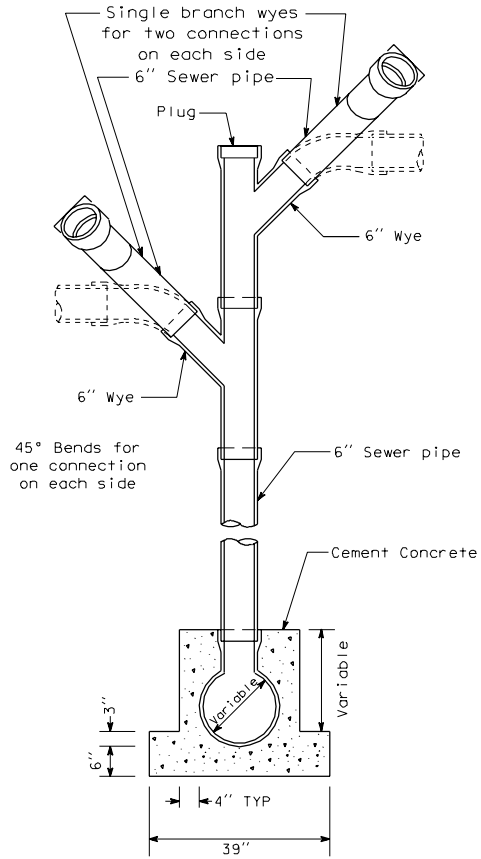

SECTION A-A

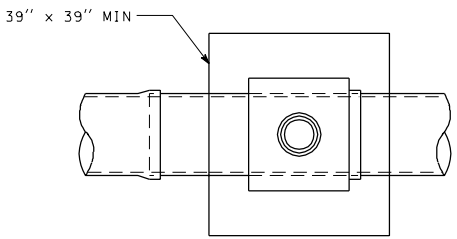

SECTION B-B

VERTICAL CONNECTION