WASHINGTON STATE DEPARTMENT OF TRANSPORTATION

☒ Approved

☐ Approved with revision

☐ Rejected

BY: [signature]

DATE: 9/3/98

OFFSET NOTE:
THE POST OFFSET DIMENSIONS ARE GIVEN TO THE CENTER OF THE TRAFFIC FACE OF THE BLOCKOUTS., EXCEPT AT THE FIRST TWO POSTS, WHERE THE DIMENSION IS TO THE CENTER OF THE TRAFFIC FACE OF THE POST. OFFSET POINTS ARE TO BE LOCATED BY CHORD MEASUREMENTS AT THE BACK OF THE RAIL EQUAL TO THE NOMINAL POST SPACINGS SHOWN. POSTS ARE TO BE SET APPROXIMATELY RADIAL TO THE RAILING AT EACH POST LOCATION.

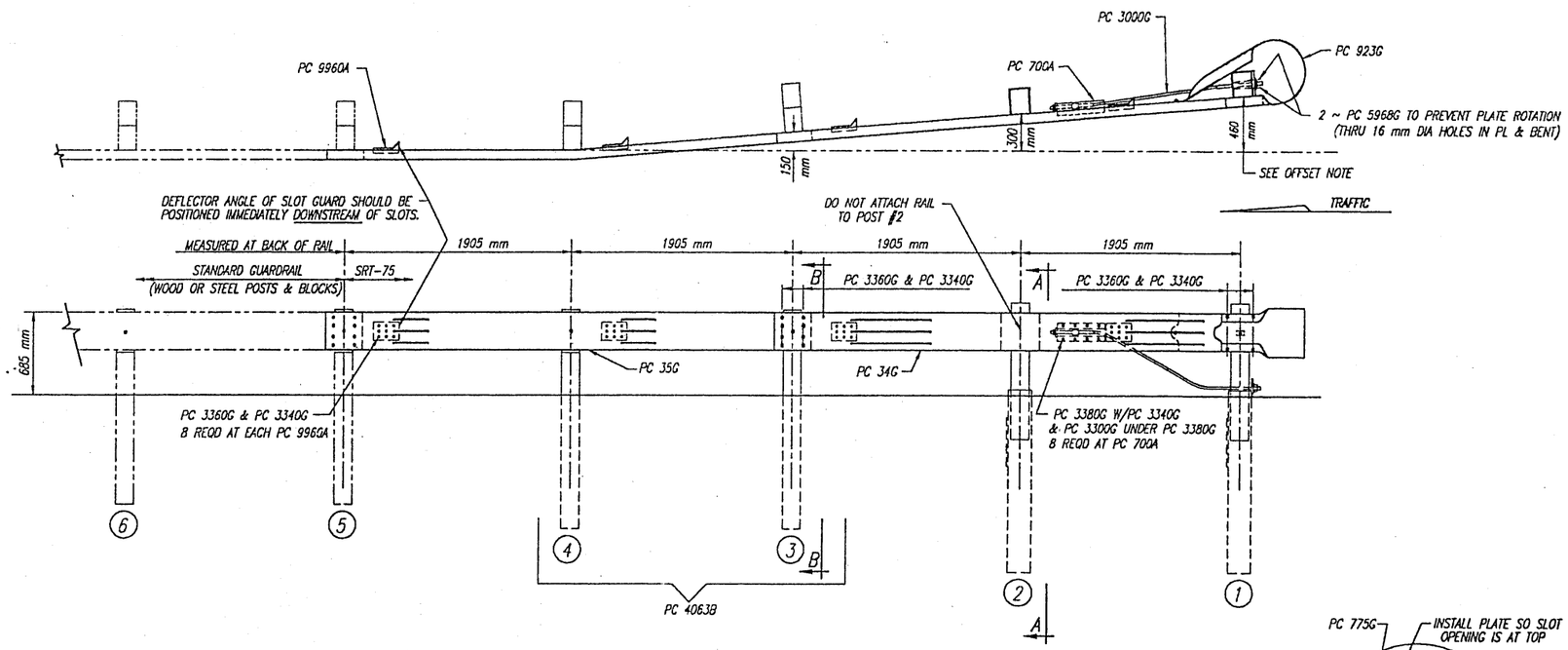

BILL OF MATERIAL		
PC	QTY	DESCRIPTION
3G	1	12/12"/BACKUP (GUARDRAIL)
34G	1	12/12'6/S SRT-1 (GUARDRAIL)
35G	1	12/12'6/6'3/S SRT-2 (GUARDRAIL)
70GA	1	CABLE ANCHOR BRACKET
705G	1	2"ø x 5 1/2" PIPE
736G	2	5'0 TUBE SLEEVE
766G	2	1/4 x 18 x 24 SOIL PLATE
775G	1	5/8 x 6 x 8 BEARING PLATE
923G	1	12/GARRIER/98" (TERMINAL)
3000G	1	3/4 x 6'6 CABLE
3300G	16	5/8" WASHER
3320G	1	3/16 x 1 3/4 x 3 WASHER
3340G	63	5/8" HEX NUT
3360G	45	5/8"ø x 1 1/4" SPLICE BOLT
3380G	8	5/8"ø x 1 1/2" HEX HD BOLT
3478G	4	5/8"ø x 7 1/2" HEX HD BOLT
3497G	2	5/8"ø x 9 1/2" HEX HD BOLT
3500G	2	5/8"ø x 10" POST BOLT
3580G	2	5/8"ø x 18" POST BOLT
3900G	1	1" WASHER
3910G	2	1" HEX NUT
4063B	2	6'0 POST 6 x 8
4075B	2	14" BLOCK 6 x 8
4147B	2	3' 9 POST 5 1/2 x 7 1/2
5968G	2	16d NAIL SRT
996GA	4	SLOT GUARD
9961G	1	3/8 x 3 x 4 PLATE WASHER

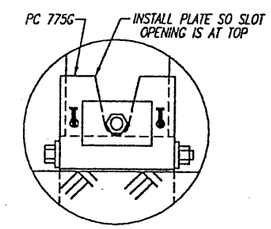

BEARING PLATE ORIENTATION

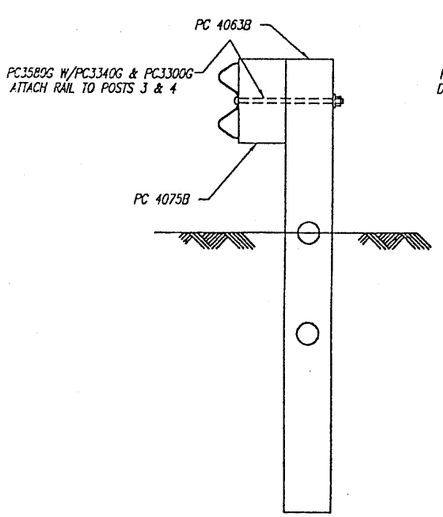

SECTION "B-B"
(@ POSTS #3 & #4)

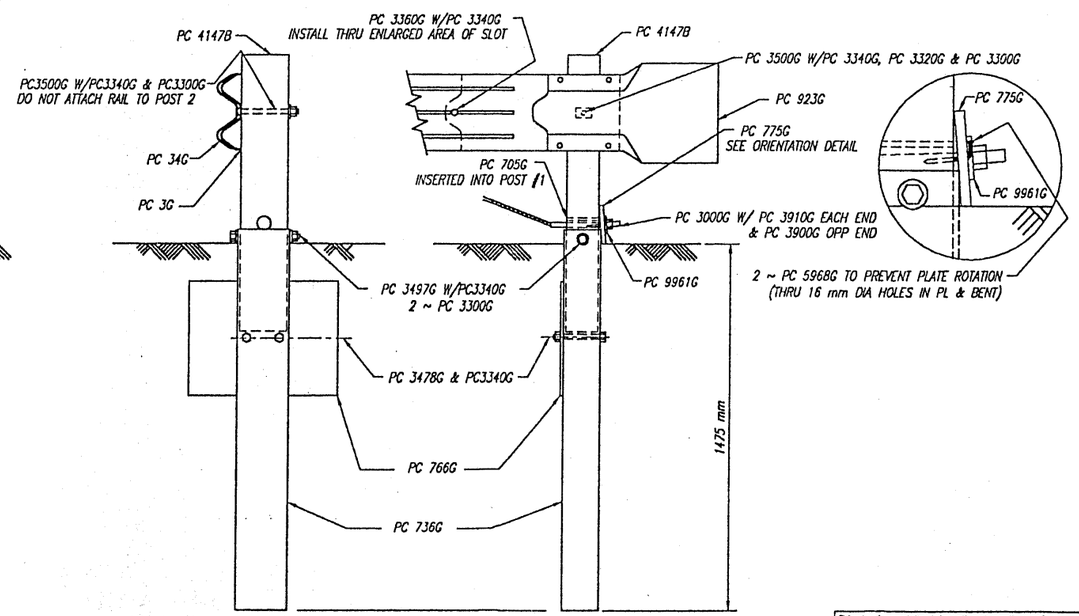

SECTION "A-A"
(@ POST #2)

ENLARGED VIEW @ POST #1

This drawing and the information shown thereon is the sole property of TRINITY INDUSTRIES, INC. Neither the drawing nor such information is to be used for any purpose other than that for which it was specifically furnished by TRINITY INDUSTRIES, INC., nor is any reproduction authorized without written permission.

REV.	CHK'D	BY	DATE	REMARKS
3		BT	11-12-96	REMOVED PC9713, ADDED PC3 & CHG QUANTITIES PC3300,3340 &3500
2		BT	4-19-96	REMOVED STRUT
1		BT	1-31-96	REMOVED SLOT GUARD AT POST 2

SYRO SRT—75

SLOTTED RAIL TERMINAL (SRT-75)
POST LAYOUT AND ERECTION DETAILS

CUSTOMER | P.O. No.

DRAWN: B. TAYACH
CHECKED:
APPROVED:
DATE: 3-1-95
ENG. FILE #: SRT75M
SHT. No.: E1 OF 1
DRAWING No.: SS 405M
REV.: 3

TRINITY INDUSTRIES, INC. SYRO
DALLAS, TX CENTERVILLE, UT | GIRARD, OH LIMA, OH | FORT WORTH, TX ELIZABETHTOWN, KY