WASHINGTON STATE DEPARTMENT OF TRANSPORTATION

☐ Approved

☒ Approved with revision

☐ Rejected

Alternate end terminal and slot guards are acceptable

BY: [signature]

DATE: 9/3/98

OFFSET NOTE:
THE POST OFFSET DIMENSIONS ARE GIVEN TO THE CENTER OF THE TRAFFIC FACE OF THE BLOCKOUTS., EXCEPT AT THE FIRST TWO POSTS, WHERE THE DIMENSION IS TO THE CENTER OF THE TRAFFIC FACE OF THE POST. OFFSET POINTS ARE TO BE LOCATED BY CHORD MEASUREMENTS AT THE BACK OF THE RAIL EQUAL TO THE NOMINAL POST SPACINGS SHOWN. POSTS ARE TO BE SET APPROXIMATELY RADIAL TO THE RAILING AT EACH POST LOCATION.

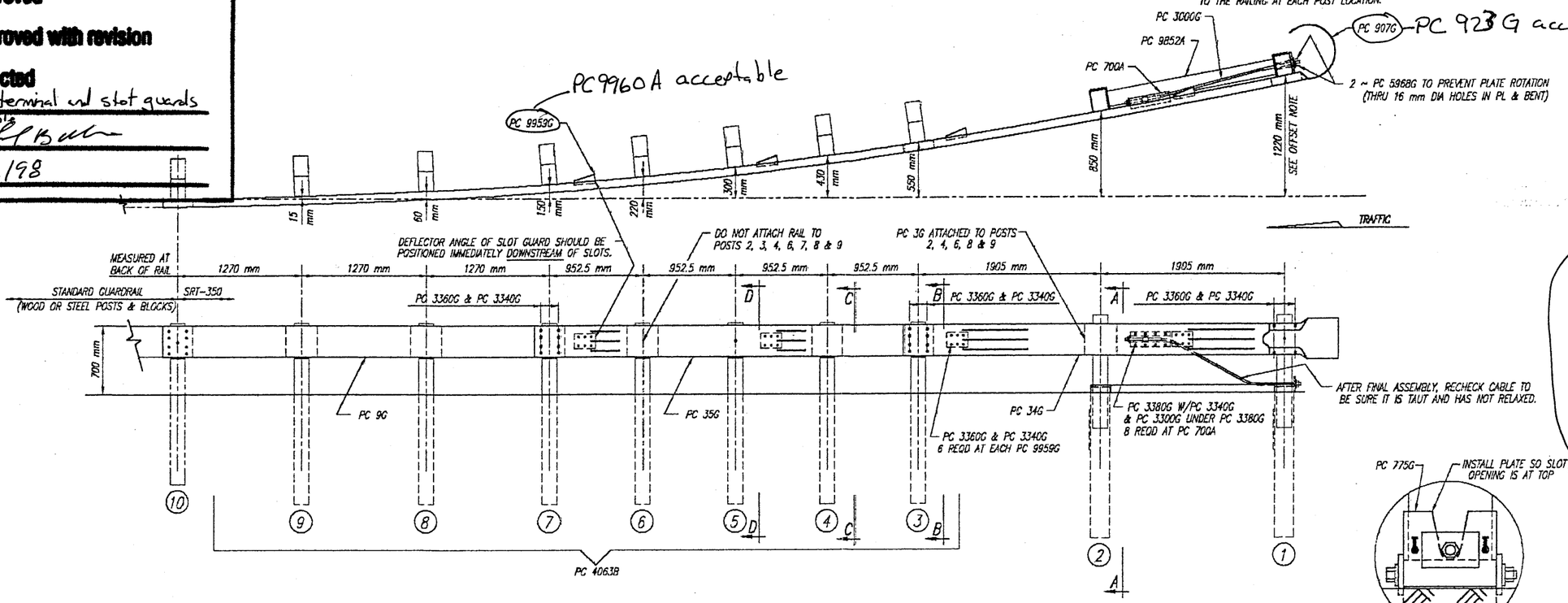

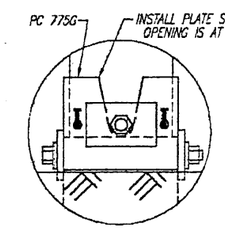

BEARING PLATE ORIENTATION

923G acceptable

BILL OF MATERIAL		
PC	QTY	DESCRIPTION
3G	5	12/12'/BACKUP (GUARDRAIL)
9G	1	12/12'6/6'3/S (GUARDRAIL)
34G	1	12/12'6/S SRT-1 (GUARDRAIL)
35G	1	12/12'6/6'3/S SRT-2 (GUARDRAIL)
700A	1	CABLE ANCHOR BRACKET
705G	1	2"ø x 5 1/2" PIPE
736G	2	5'0 TUBE SLEEVE
766G	2	1/4 x 18 x 24 SOIL PLATE
775G	1	5/8 x 6 x 8 BEARING PLATE
907G	1	12/BUFFER/ROLLED (TERMINAL)
3000G	1	3/4 x 6'6 CABLE
3300G	21	5/8" WASHER
3340G	68	5/8" HEX NUT
3360G	45	5/8"ø x 1 1/4" SPLICE BOLT
3380G	8	5/8"ø x 1 1/2" HEX HD BOLT
3478G	4	5/8"ø x 7 1/2" HEX HD BOLT
3497G	2	5/8"ø x 9 1/2" HEX HD BOLT
3500G	2	5/8"ø x 10" POST BOLT
3580G	7	5/8"ø x 18" POST BOLT
3900G	1	1" WASHER
3910G	2	1" HEX NUT
4063B	7	6'0 POST 6 x 8
4075B	7	14" BLOCK 6 x 8
4147B	2	3' 9 POST 5 1/2 x 7 1/2
5968G	2	16d NAIL SRT
9852A	1	STRUT ASSEMBLY
9959G	4	SLOT GUARD
9961G	1	3/8 x 3 x 4 PLATE WASHER

9960A acceptable

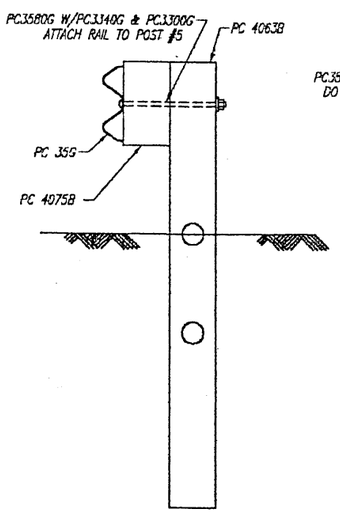

SECTION "D-D"
(@ POST #5)

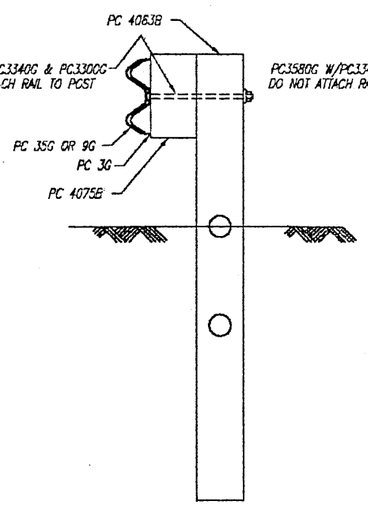

SECTION "C-C"
(@ POSTS #4, #6, #8 & #9)

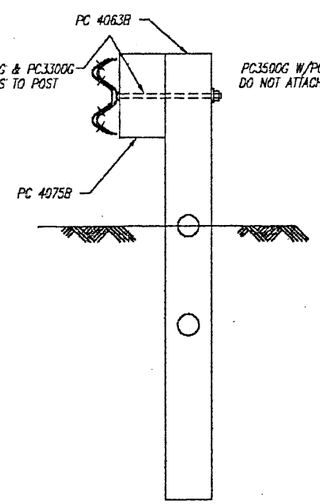

SECTION "B-B"
(@ POSTS #3 & #7)

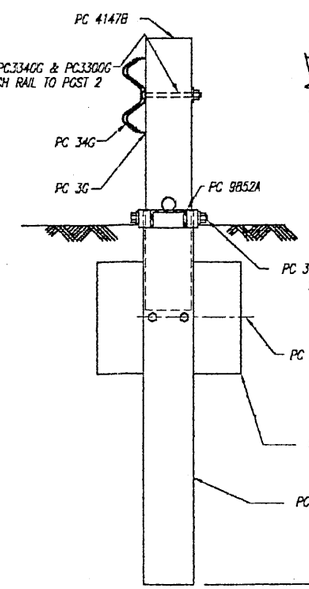

SECTION "A-A"
(@ POST #2)

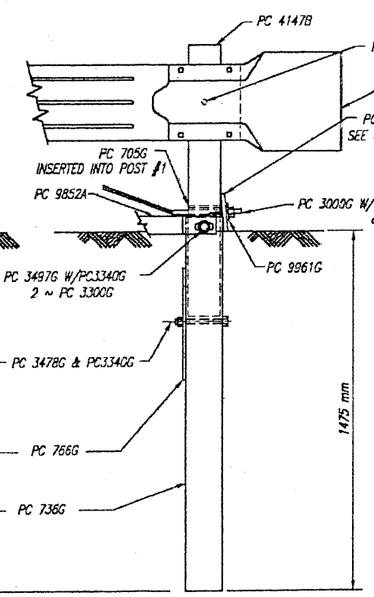

ENLARGED VIEW @ POST #1

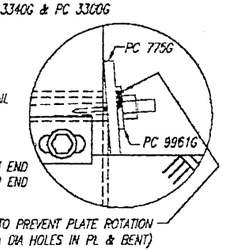

This drawing and the information shown thereon is the sole property of TRINITY INDUSTRIES, INC. Neither the drawing nor such information is to be used for any purpose other than that for which it was specifically furnished by TRINITY INDUSTRIES, INC., nor is any reproduction authorized without written permission.

REV.	CHK'D	BY	DATE	REMARKS

SYRO SRT-350

SLOTTED RAIL TERMINAL SRT-350
POST LAYOUT AND ERECTION DETAILS
(12.5, 9 POST)

CUSTOMER | P.O. No.

DRAWN: B. TAKACH
CHECKED:
APPROVED:
DATE: 8-25-98
ENG. FILE #: SS440M
SHT. No.: E1 OF 1
DRAWING No.: SS 440M
REV.: 0

TRINITY INDUSTRIES, INC. SYRO
DALLAS, TX · CENTERVILLE, UT · GIRARD, OH · LIMA, OH · FORT WORTH, TX · ELIZABETHTOWN, KY