NOTE:
INSTALL RAIL PARALLEL TO ROADWAY EDGE LINE. WHEN TAPER IS REQUIRED BY DESIGN ENGINEER, A 25 :1 TAPER OVER THE LENGTH OF SYSTEM IS ALLOWABLE.

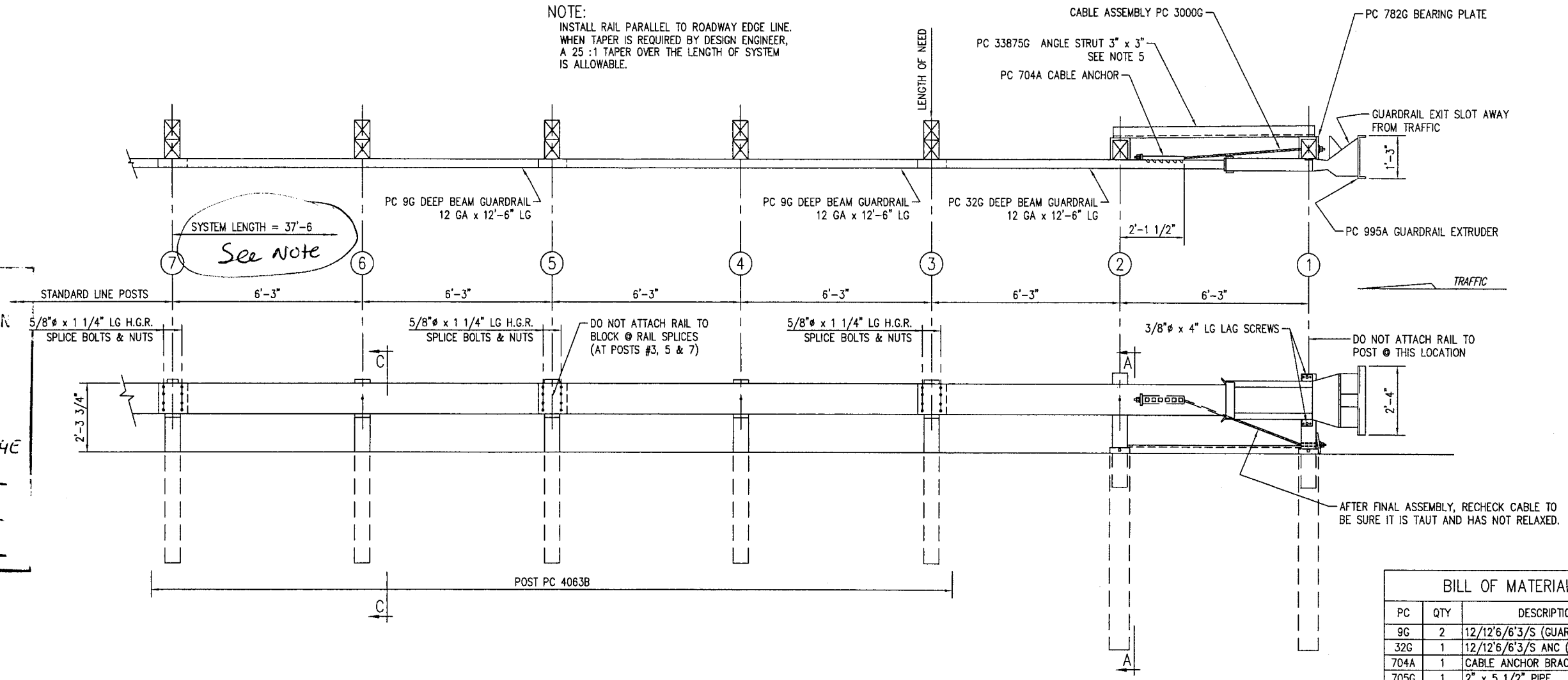


WASHINGTON STATE DEPARTMENT OF TRANSPORTATION

☐ Approved

☑ Approved with revision

☐ Rejected

C-4E

for Pay length see Standard Plan

BY Doug McCLaughan

DATE: 1/10/03

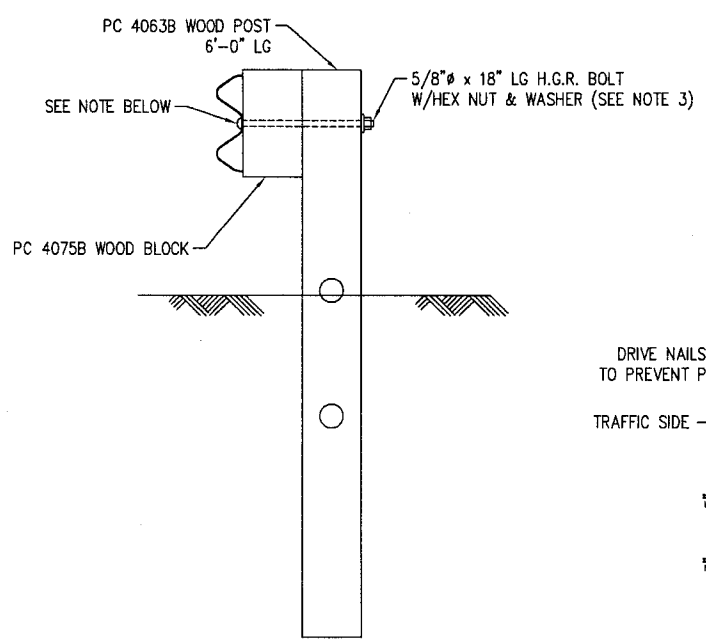


NOTE:
SECTION "C-C" IS SIMILAR @ POST #3, 5 & 7 EXCEPT RAIL IS NOT ATTACHED.

SECTION "C-C"
(TYP @ POSTS #4 & 6)

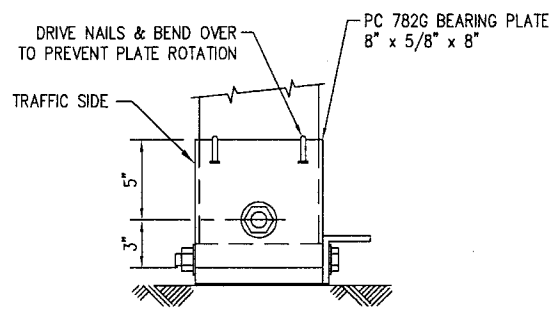


VIEW "K-K"
BEARING PLATE ORIENTATION

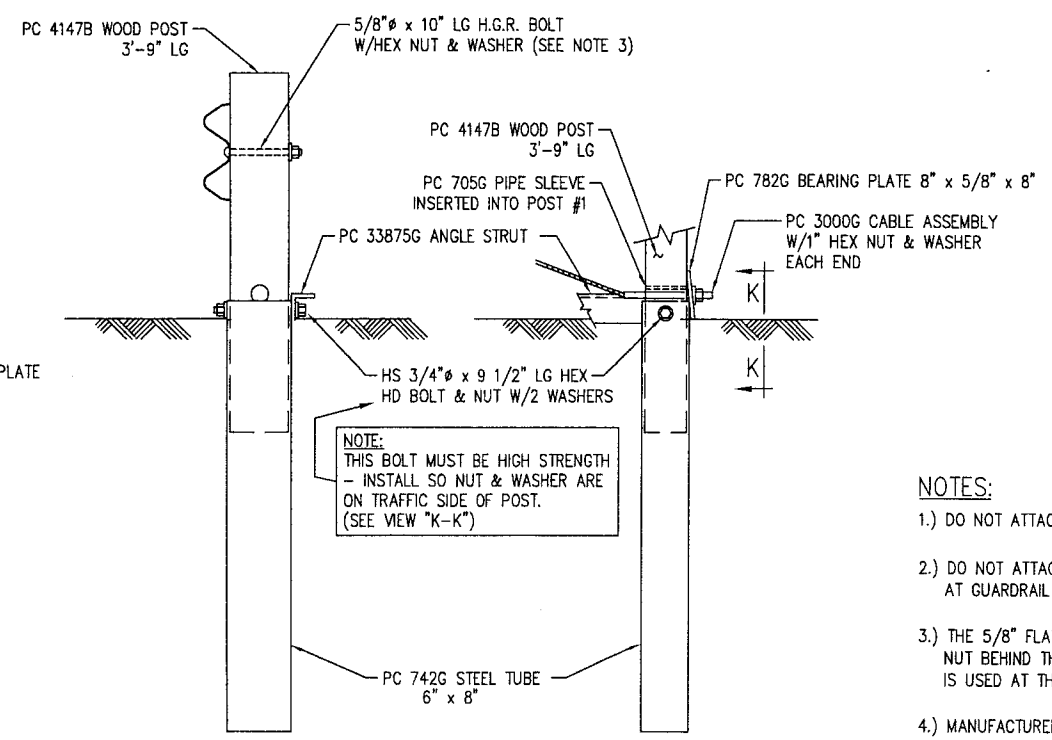


SECTION "A-A"
(@ POST #2)

PARTIAL VIEW @ POST #1
DO NOT ATTACH GUARDRAIL TO POST

NOTES:

1.) DO NOT ATTACH GUARDRAIL TO POST # 1.

2.) DO NOT ATTACH GUARDRAIL TO POST BLOCK AT GUARDRAIL LAP SPLICES.

3.) THE 5/8" FLAT WASHER IS USED UNDER THE NUT BEHIND THE POST ONLY. NO WASHER IS USED AT THE RAIL.

4.) MANUFACTURER SUGGESTS CUSTOMER TO PROVIDE REFLECTORIZATION OF TERMINAL.

5.) ANGLE STRUT MUST BE ATTACHED USING 3/4" DIA HIGH STRENGTH BOLTS.

BILL OF MATERIAL

| PC | QTY | DESCRIPTION |
|---|---|---|
| 9G | 2 | 12/12'6/6'3/S (GUARDRAIL) |
| 32G | 1 | 12/12'6/6'3/S ANC (GUARDRAIL) |
| 704A | 1 | CABLE ANCHOR BRACKET |
| 705G | 1 | 2" x 5 1/2" PIPE |
| 742G | 2 | 6'-0" TUBE SLEEVE |
| 782G | 1 | 5/8" x 8" x 8" BEARING PLATE |
| 995A | 1 | ET-PLUS EXTRUDER |
| 3000G | 1 | CABLE 3/4 x 6'6 |
| 3300G | 6 | 5/8" WASHER |
| 3340G | 30 | 5/8" HEX NUT |
| 3360G | 24 | 5/8"ø x 1 1/4" SPLICE BOLT |
| 3500G | 1 | 5/8"ø x 10" POST BOLT |
| 3580G | 5 | 5/8"ø x 18" POST BOLT |
| 3700G | 4 | 3/4" WASHER |
| 3704G | 2 | 3/4" HEX NUT |
| 3900G | 2 | 1" WASHER |
| 3910G | 2 | 1" HEX NUT |
| 4063B | 5 | WD 6'0 POST 6 x 8 |
| 4075B | 5 | WD BLOCK 1'2 x 6 x 8 DR |
| 4147B | 2 | WD 3'9 POST 5 1/2 x 7 1/2 |
| 4228G | 2 | 3/8"ø x 4" LAG SCREW |
| 5148G | 2 | 3/4"ø x 9 1/2" HEX HD BOLT |
| 33875G | 1 | ANGLE STRUT |

GIRARD ENGINEERING DEPT.
ISSUED
JAN - 9 2003
TRINITY INDUSTRIES, INC.
1170 N. STATE STREET
GIRARD, OHIO 44420

| REV. | CHK'D | BY | DATE | REMARKS |
|---|---|---|---|---|
| 1 | | L.H. | 1/08/03 | REVISED TITLE BLOCK |

ET-PLUS

ET-PLUS
PLAN, ELEVATION & SECTION
37'-6" LG WITH 12'-6" PANELS, HBA STRUT
POST SLEEVES 1-2 WITHOUT SOIL PL

TRINITY INDUSTRIES, INC.
HIGHWAY SAFETY PRODUCTS
2525 STEMMONS FREEWAY, DALLAS, TX 75207

| | |
|---|---|
| DRAWN | E.A.S. |
| CHECKED | BT |
| SCALE | N.T.S. |
| DATE | 10-15-01 |
| ENG. FILE # | SS339-01E |
| SHT.No. | E1 OF 1 |
| DRAWING NO. | SS-339 |
| REV. | 1 |

This drawing and the information shown thereon is the sole property of TRINITY INDUSTRIES, INC. Neither the drawing nor such information is to be used for any purpose other than that for which it was specifically furnished by TRINITY INDUSTRIES, INC., nor is any reproduction authorized without written permission.