NOTE:
INSTALL RAIL PARALLEL TO ROADWAY EDGE LINE.
WHEN TAPER IS REQUIRED BY DESIGN ENGINEER,
A 50:1 TAPER OVER THE 15.24 METER LENGTH OF SYSTEM
IS ALLOWABLE.

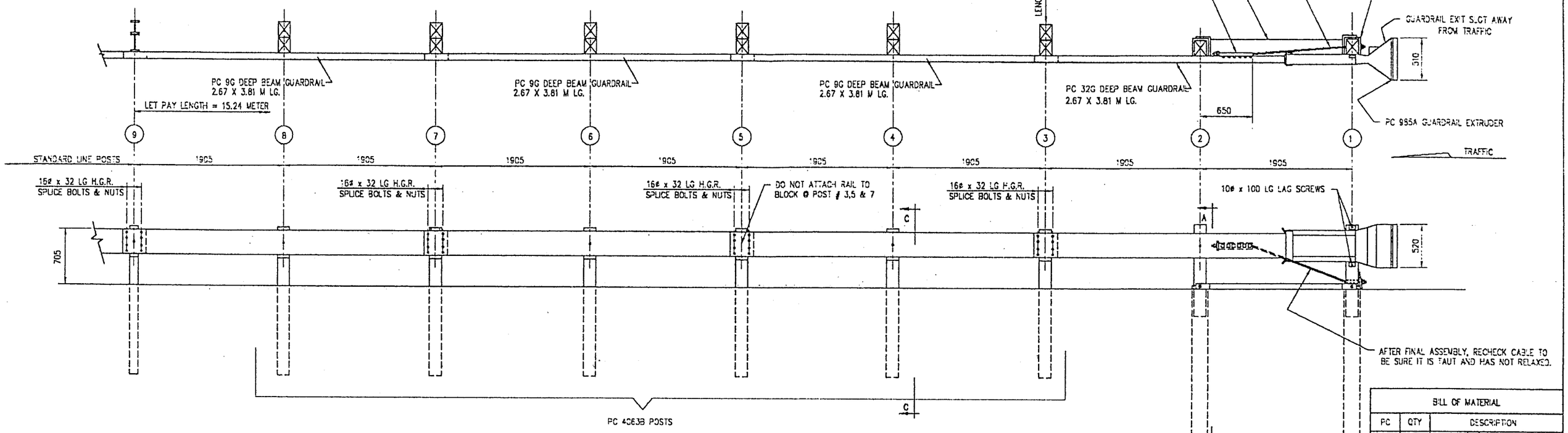

NOTES:
1.) THE 16ø FLAT WASHER IS USED UNDER THE NUT, BEHIND THE POST ONLY. NO WASHER IS USED AT THE RAIL.
2.) MANUFACTURER SUGGESTS CUSTOMER TO PROVIDE REFLECTORIZATION OF TERMINAL.
3.) ALL DIM. SHOWN ARE IN MM UNLESS NOTED

BILL OF MATERIAL

PC	QTY	DESCRIPTION
9G	3	12/12.5'/6'3"/S (GUARDRAIL)
32G	1	12/12.5'/6'3/S ANC (GUARDRAIL
704A	1	CABLE ANCHOR BRACKET
705G	1	2" x 5 1/2" PIPE
732G	2	6'6 TUBE SLEEVE
782G	1	5/8" x 8" x 8" BEARING PLATE
985A	1	ET-2000 EXTRUDER
3000G	1	CABLE 3/4 x 6'6
3300G	11	5/8" WASHER
3340G	45	5/8" HEX NUT
3360G	32	5/8"ø x 1 1/4" SPLICE BOLT
3478G	4	5/8"ø x 7 1/2" HEX HD BOLT
3497G	2	5/8"ø x 9 1/2" HEX HD BOLT
3500G	1	5/8"ø x 10" POST BOLT
3560G	6	5/8"ø x 18" POST BOLT
3900G	2	1" WASHER
3910G	2	1" HEX NUT
4063B	6	WD 6'0 POST 6 x 8
4075B	6	WD BLOCK 1'2 x 6 x 8 DR
4147B	2	WD 3'8 POST 5 1/2 x 7 1/2
4228G	2	3/8"ø x 4" LAG SCREW
9852A	1	STRUT & YOKE

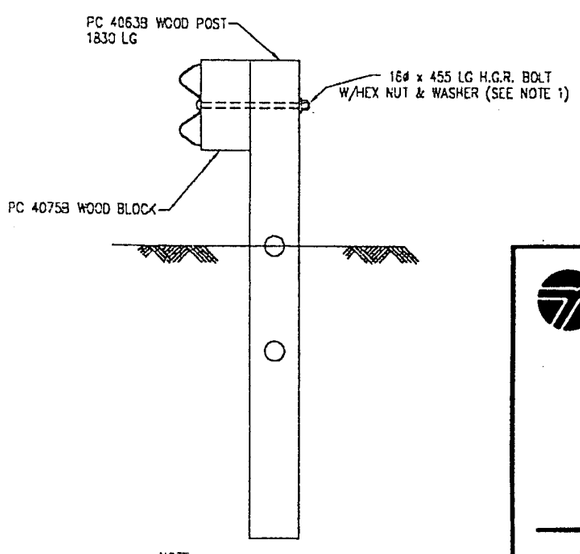

NOTE:
SECTION "C-C" IS SIMILAR @ POST #3,5 & 7
EXCEPT RAIL IS NOT ATTACHED.

SECTION "C-C"
(TYP @ POSTS #4, 6, & 8)

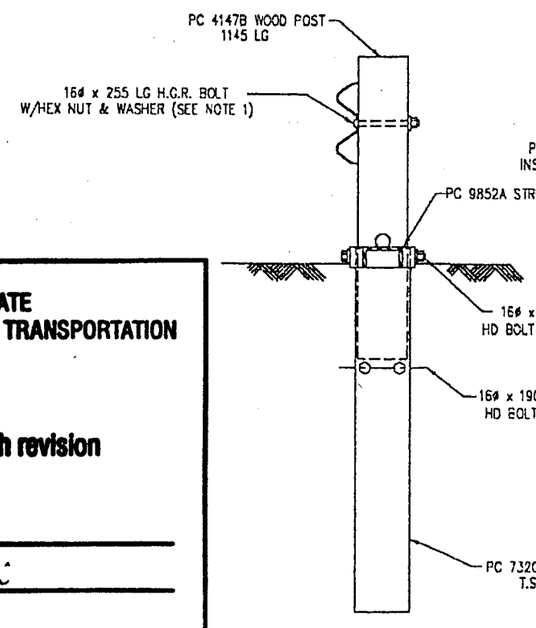

SECTION "A-A"
(@ POST #2)

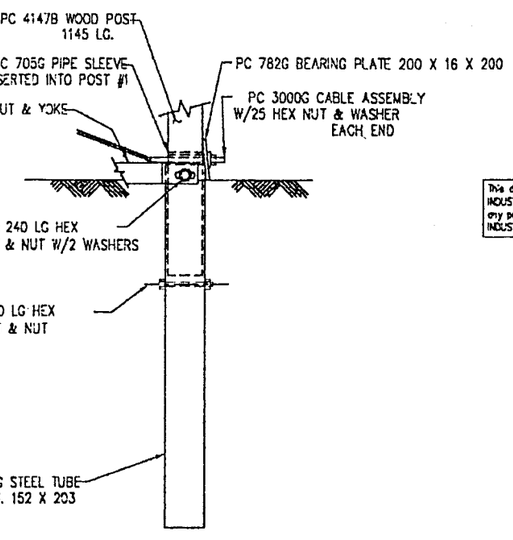

PARTIAL VIEW @ POST #1

WASHINGTON STATE DEPARTMENT OF TRANSPORTATION

☒ Approved

☐ Approved with revision

☐ Rejected

BY: Prachal B Adhi

DATE: 11/22/99

This drawing and the information shown thereon is the sole property of TRINITY INDUSTRIES, INC. Neither the drawing nor such information is to be used for any purpose other than that for which it was specifically furnished by TRINITY INDUSTRIES, INC, nor is any reproduction authorized without written permission.

REV.	CHK'D	BY	DATE	REMARKS

SYRO

ET2000-LET

ET2000 15.24 METER LET – 3.81 M PANELS
PLAN, ELEVATION & SECTIONS

DRAWN	Dipak Dhami
CHECKED	Robert Tokach
APPROVED	
DATE	10/13/98
ENG. FILE #	SS269M
SHT.No.	E1 OF 1
DRAWING No.	SS 269M
REV.	0

CUSTOMER | P.O. No.

TRINITY INDUSTRIES, INC.
DALLAS, TX CENTERVILLE, UT GRAND, OH LIMA, OH FORT WORTH, TX ELIZABETHTOWN, KY