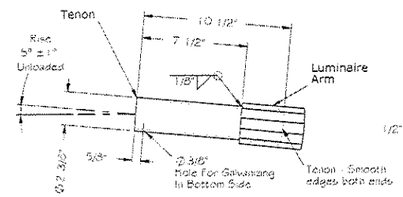


Detail 1
Luminaire Tenon

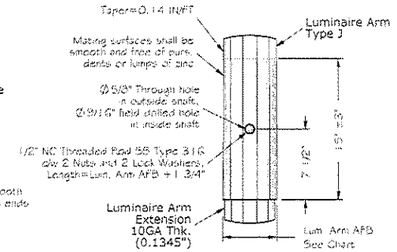


Detail 2
Luminaire Arm Slip Joint

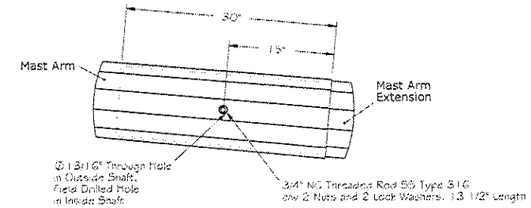


Detail 5
Mast Arm Slip Joint
(41'-65' Mast Arms Only)

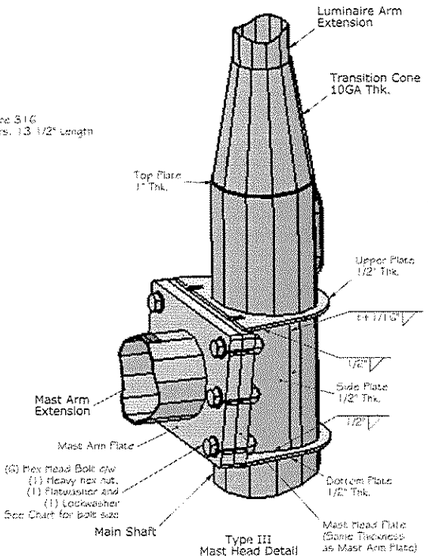


Type III
Mast Head Detail

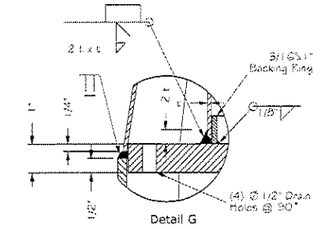


Detail G

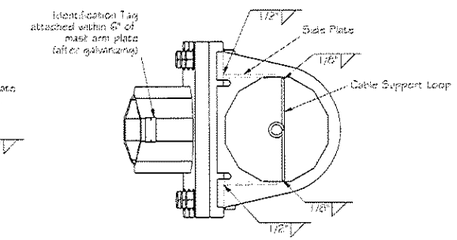


Section C-C

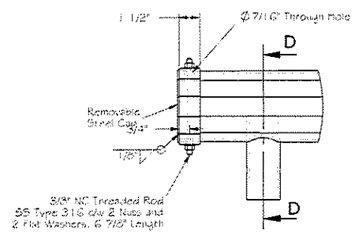


Detail 6
Removable Cap
(Top View)

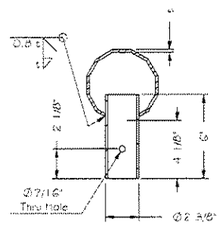


Section D-D
Signal Tenon

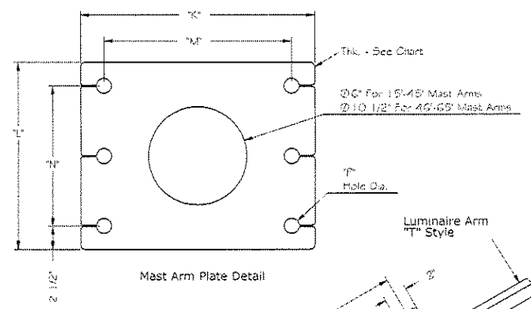


Mast Arm Plate Detail

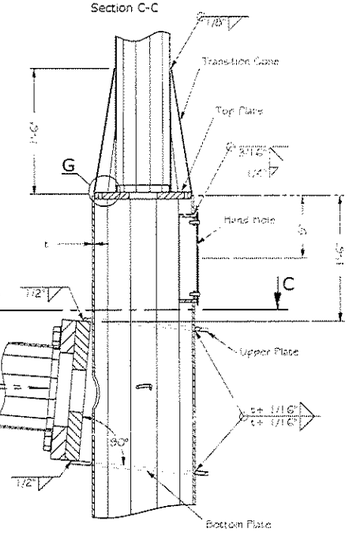


Detail 3
Mast Head Type III
(Middle Section)

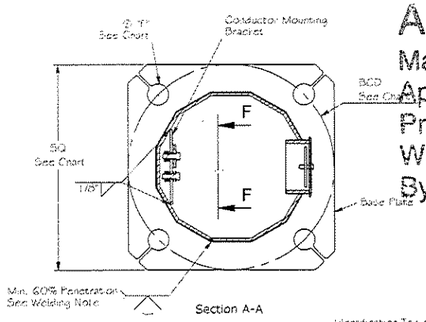


Section A-A

APPROVED
Manufacturer's Pole Plan
Approved For Listing As A
Pre-Approved Drawing
WSDOT Bridge & Structures Office
By GB Date 4/5/2004

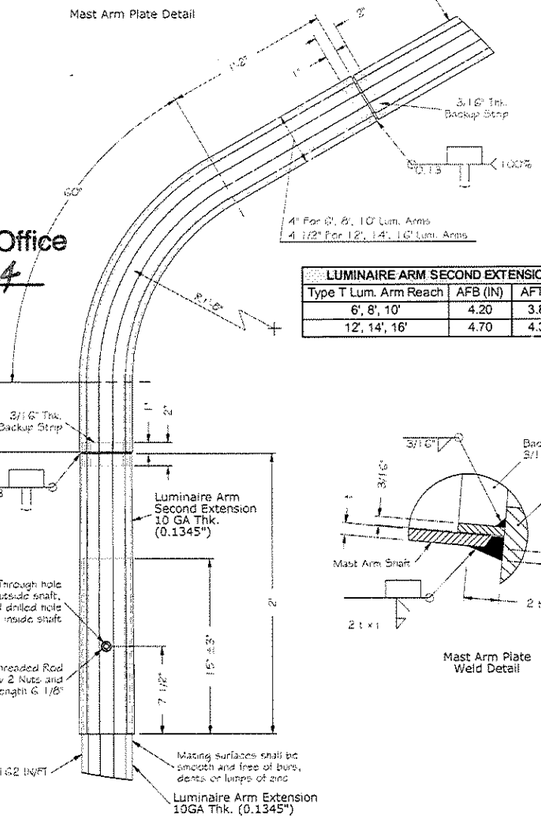


Detail 8
Slip Joint & Elbow
For Luminaire Type "T"

| LUMINAIRE ARM SECOND EXTENSION | | |
|---|---|---|
| Type T Lum. Arm Reach | AFB (IN) | AFT (IN) |
| 6', 8', 10' | 4.20 | 3.875 |
| 12', 14', 16' | 4.70 | 4.375 |

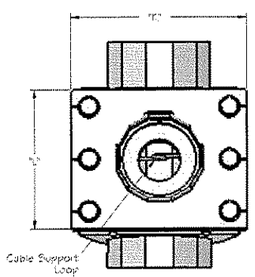


View B-B

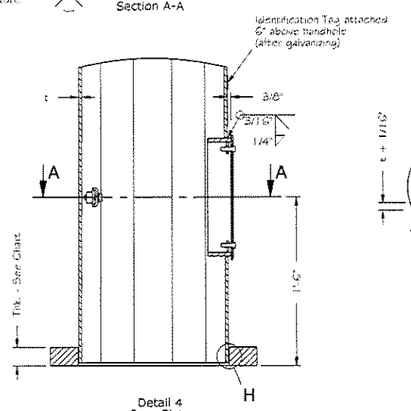


Detail 4
Base Plate

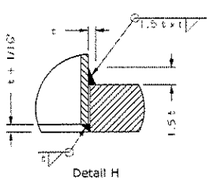


Detail H

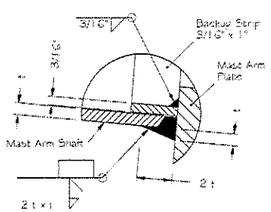


Mast Arm Plate
Weld Detail

| Rev. # | REVISION DESCRIPTION | REV. DATE | BY | APPR'D |
|---|---|---|---|---|
| | | | | |
| | | | | |
| | | | | |

DESIGNED: LUISS BARCAN
CHECKED: IOAN GHOSAN
APPROVED: TED BROCKMAN

PROFESSIONAL ENGINEER SEAL
PROFESSIONAL ENGINEER
PROVINCE OF BRITISH COLUMBIA
T. A. BROCKMAN
DATE: 01-Apr-2004
APR 0 2 2004

**West Coast Engineering Group Inc.**
6823 NORTHGATE WAY
FERNDALE, WA, USA, 98248-8309
Ph.(360) 366-3400, Fx.(360) 366-3401
www.wceng.com

PROJECT: TRAFFIC SIGNAL STRUCTURES
STATE OF WASHINGTON
-

SCALE: NTS
QTY: -
SHEET 2 OF 3
REV. 0
JOB #: -
DWG. #: WSDOT-TS-01

THE INFORMATION CONTAINED IN THIS DRAWING IS THE PROPERTY OF WEST COAST ENGINEERING GROUP, AND ANY INFORMATION OBTAINED FROM ITS CONTENT SHALL BE USED ONLY FOR THE SPECIFIC PURPOSE AUTHORIZED BY WEST COAST ENGINEERING GROUP.