LUMINAIRE ARM TYPE "J"				
Luminaire Arm Reach "C"	AFB	AFT	THK	Shaft Length (FT)
6'	4.41"	2 3/4"	0.1345"	11.94
8'	4.65"	2 3/4"	0.1345"	13.61
10'	4.90"	2 3/4"	0.1345"	15.45
12'	5.16"	2 3/4"	0.1345"	17.28
14'	5.54"	2 7/8"	3/16"	19.11
16'	5.80"	2 7/8"	3/16"	20.95

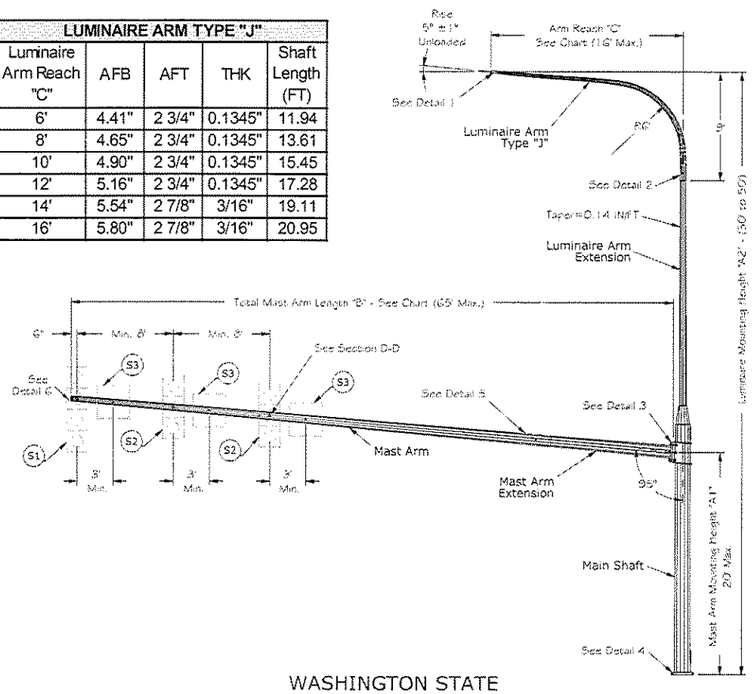

WASHINGTON STATE
POLE TYPE III-J

MAIN SHAFT			
Mast Arm Length "B"	AFB	AFT	THK
15' to 45'	14"	13"	1/4"
46' to 65'	16"	14 1/2"	5/16"

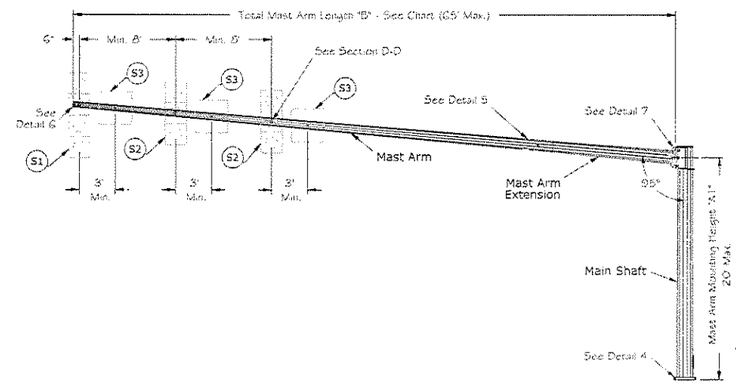

WASHINGTON STATE
POLE TYPE II

LUMINAIRE ARM TYPE "T"					
Luminaire Arm Reach "C"	AFB	AFT	THK	Shaft Length (FT)	Luminaire Height (FT)
6'	3 7/8"	2 3/4"	0.1345"	3.88	5.49
8'	3 7/8"	2 3/4"	0.1345"	5.95	6.53
10'	3 7/8"	2 3/4"	0.1345"	8.26	7.68
12'	4 3/8"	2 3/4"	0.1345"	10.56	8.84
14'	4 3/8"	2 3/4"	0.1345"	12.88	9.99
16'	4 3/8"	2 3/4"	0.1345"	15.19	11.15

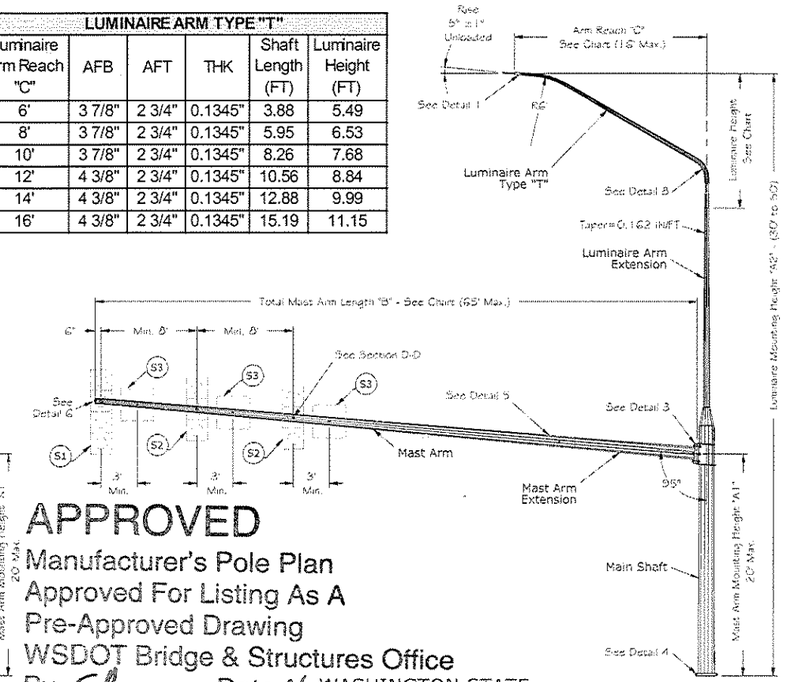

APPROVED
Manufacturer's Pole Plan
Approved For Listing As A
Pre-Approved Drawing
WSDOT Bridge & Structures Office
By GB Date 4/5/04

WASHINGTON STATE
POLE TYPE III-T

NOTES

WELDING:
Welding of structures shall be in accordance with the latest edition of the AWS Structural Welding Code D1.1-Steel
Longitudinal seam weld is 60% minimum penetration except for 6 inches from end of section at flange, base plate and slip joint it is 100% penetration.

FINISH: All components to be hot dip galvanized as per ASTM A123 / A153.

ASSEMBLING:
Torque bolts & nuts using the "Turn-of-nut" tightening method. Bring all bolts and nuts in the joint to a "Snug-tight" condition. "Snug-tight" is the tightness attained by a few impacts of an impact wrench or the full effort of a man using a spud wrench. When all bolts in the joint are "Snug-tight", each bolt shall be tightened additionally by rotating the bolt or nut 1/3 turn+/- 30deg.

All tapered tubes are 12 sided
* AFB - across the flats at the base of the shaft, AFT - across the flats at the top of the shaft

MATERIAL DATA

COMPONENT	GRADE
Tubes with thk. = 0.1345"	ASTM A607 GR.50
All other tubes	ASTM A572 GR.50
Base Plate	ASTM A572 GR.50
Mast Head Plates	ASTM A572 GR.50
Pipes	ASTM A53 GR.B
Anchor Bolts	ASTM A449
Connection Bolts	ASTM A325 - Type1
Nuts	ASTM A563-DH
Washers	ASTM F436
Handhole Rings	ASTM A36
Handhole Covers	ASTM A36

LOADING INFORMATION

DESIGN CRITERIA:
Design Standard: 2001 AASHTO Standard Specifications For Structural Supports For Highway Signs, Luminaires And Traffic Signals.
- Design wind speed - 90 mph (3 second gust wind speed)
- Design life / recurrence interval - 25 years
- Fatigue category - III (galloping, natural & truck gusts)
- Maximum truck gust wind speed - 65 mph
- Each structure has a load capacity as shown in the mast arm chart.
- Mast arms 30' and longer are designed to support 3 traffic signals and 3 signs. 15', 20' and 25' mast arms are designed to support 2 traffic signals and 2 signs.

Design properties of signs and signals are:

Signal (S1):	Signal (S2):	Sign (S3):
Area: 11.6 sq.ft.	Area: 9.2 sq.ft.	Area: 7.5 sq.ft.
Weight: 86 lbs	Weight: 60 lbs	Weight: 30 lbs

CAFL AT CRITICAL CONNECTIONS:
-Pole to base plate connection = E
-Arm to flange connection = D
-Flange gussets = E'
-Pole wall at gusset = E'
-Pole cross section at flange gusset = E
-Slip Joint = B
-Pole shaft = B'

MAST ARM

Mast Arm Length Max."B"	MAST ARM				MAST ARM EXTENSION				Connecting Bolts		Mast Arm Plate						Sign & Signal Max. Loading XYZ	Base Plate				Anchor Bolt	
	AFB*	AFT*	THK	Shaft Length	AFB	AFT	THK	Shaft Length	Dia.	Length	"K"	"L"	"M"	"N"	"P"	Thk.		SQ	BCD	"F"	Thk.	Length	Dia.
15'	7.50"	5"	0.1345"	15'	NA	NA	NA	NA	1 1/4"	5"	21 1/2"	17"	17 1/2"	12"	1 3/8"	1 1/2"	341	18"	18"	1 3/4"	1 1/2"	60"	1 1/2"
20'	8.25"	5"	0.1345"	20'	NA	NA	NA	NA	1 1/4"	5"	21 1/2"	17"	17 1/2"	12"	1 3/8"	1 1/2"	520	18"	18"	1 3/4"	1 1/2"	60"	1 1/2"
25'	9.00"	5"	0.1345"	25'	NA	NA	NA	NA	1 1/4"	5"	21 1/2"	17"	17 1/2"	12"	1 3/8"	1 1/2"	699	18"	18"	1 3/4"	1 1/2"	60"	1 1/2"
30'	9.75"	5"	3/16"	30'	NA	NA	NA	NA	1 1/4"	5"	21 1/2"	17"	17 1/2"	12"	1 3/8"	1 1/2"	1080	18"	18"	1 3/4"	1 1/2"	60"	1 1/2"
35'	10.50"	5"	3/16"	35'	NA	NA	NA	NA	1 1/4"	5"	21 1/2"	17"	17 1/2"	12"	1 3/8"	1 1/2"	1343	18"	18"	1 3/4"	1 1/2"	60"	1 1/2"
40'	11.25"	5"	3/16"	40'	NA	NA	NA	NA	1 1/4"	5"	21 1/2"	17"	17 1/2"	12"	1 3/8"	1 1/2"	1605	18"	18"	1 3/4"	1 1/2"	60"	1 1/2"
45'	11.25"	5"	3/16"	40'	11.52"	10.35"	1/4"	7.5'	1 1/4"	5"	21 1/2"	17"	17 1/2"	12"	1 3/8"	1 1/2"	1868	18"	18"	1 3/4"	1 1/2"	60"	1 1/2"
50'	11.25"	5"	3/16"	40'	12.30"	10.35"	1/4"	12.5'	1 1/2"	6 1/2"	25"	20"	20"	15"	1 5/8"	2"	2130	22"	22"	2 1/4"	2"	60"	2"
55'	11.25"	5"	3/16"	40'	13.08"	10.35"	1/4"	17.5'	1 1/2"	6 1/2"	25"	20"	20"	15"	1 5/8"	2"	2393	22"	22"	2 1/4"	2"	60"	2"
60'	11.25"	5"	3/16"	40'	13.86"	10.35"	5/16"	22.5'	1 1/2"	6 1/2"	25"	20"	20"	15"	1 5/8"	2"	2655	22"	22"	2 1/4"	2"	60"	2"
65'	11.25"	5"	3/16"	40'	14.64"	10.35"	5/16"	27.5'	1 1/2"	6 1/2"	25"	20"	20"	15"	1 5/8"	2"	2918	22"	22"	2 1/4"	2"	60"	2"

THE INFORMATION CONTAINED IN THIS DRAWING IS THE PROPERTY OF WEST COAST ENGINEERING GROUP, AND ANY INFORMATION OBTAINED FROM THE CONTENT SHALL BE USED ONLY FOR THE SPECIFIC PURPOSE AUTHORIZED BY WEST COAST ENGINEERING GROUP.

Rev. #	REVISION DESCRIPTION	REV. DATE	BY	APPR'D

DESIGNED: LUISS BARCAN
CHECKED: TOMY GIOSAN
APPROVED: TED BROCKMAN

PROFESSIONAL ENGINEER SEAL
PROFESSIONAL ENGINEER
PROVINCE OF BRITISH COLUMBIA
T. A. BROCKMAN
DATE: 01-Apr-2004
APR 0 2 2004

West Coast Engineering Group Inc.
6823 NORTHGATE WAY
FERNDALE, WA, USA, 98248-8309
Ph.(360) 366-3400, Fx.(360) 366-3401
www.wceng.com

PROJECT: TRAFFIC SIGNAL STRUCTURES
STATE OF WASHINGTON
-
SCALE: NTS
QTY: -
JOB #: -
SHEET 1 OF 3
DWG. #: WSDOT-TS-01
REV: 0