#	QTY.	PART NO.	DESCRIPTION	MATERIAL
1	1	See Chart	Base Plate, 9" SQ., 1/2" Thk.	A572 GR.50
2	1	See Chart	12 Sided Shaft, 10GA Thk., AFT=4 1/8"	A607 GR.50
3	1	240-TN-4.0-001	Tenon, 4" Sch.40 Pipe, 4 1/2" OD, Length 4"	A53 GR.B
4	1	230-RG-00001	Hand Hole Ring, 4"x6 1/2"x2", 3/16" Thk., Length 18 1/16"	ASTM A36
5	1	230-CO-00001	Hand Hole Cover, 11GA Thk.	ASTM A36
6	1	230-CB-00001	Cover Bar, 1/4"x1 1/2" Flat Bar, Length 9"	ASTM A36
7	5	154-FWN-S011	3/8" Flat Washer Narrow	18-8 SS
8	1	151-HRS-0.375-23	3/8"-16 Hex Head Regular Bolt, Length 3"	18-8 SS
9	1	151-HRS-0.375-10	3/8"-16 Hex Head Regular Bolt, Length 1 1/2"	18-8 SS
10	2	153-HRN-S005	3/8"-16 Hex Regular Nut	18-8 SS

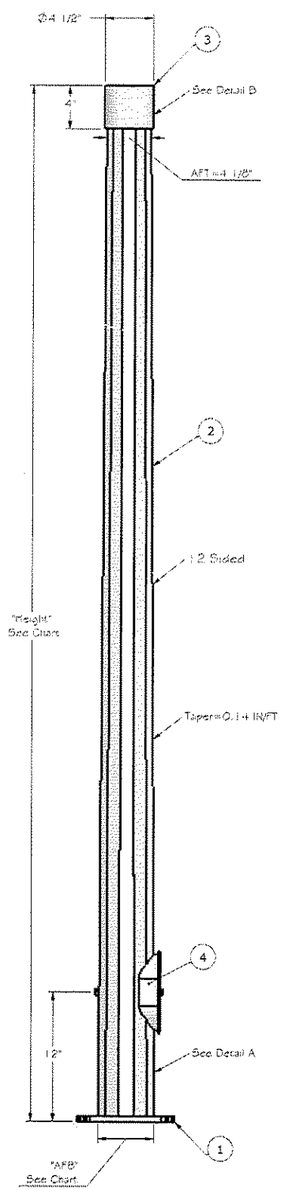

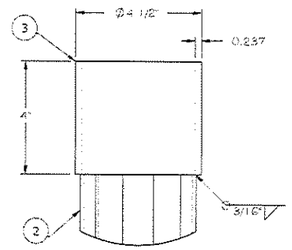

Detail B

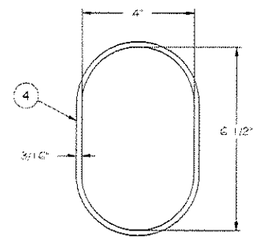

230-RG-00001
Hand Hole Ring Detail

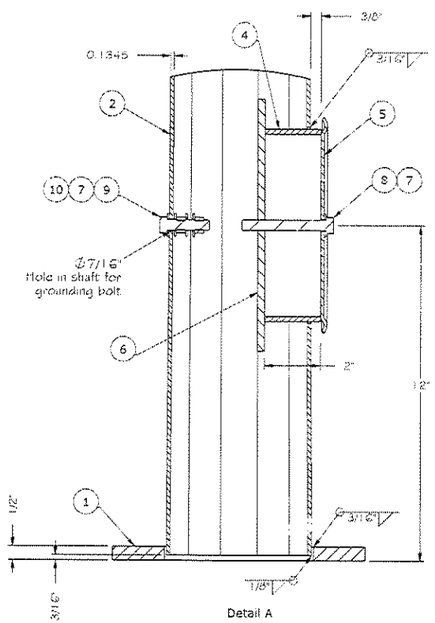

Detail A

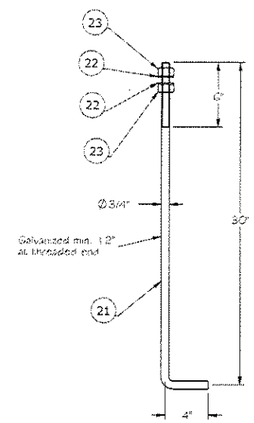

7912-0.75-001
Anchor Bolt Detail

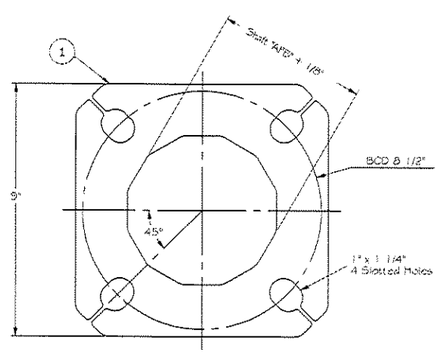

Base Plate Detail

PEDESTRIAN POLES							
Type of Pole	Pole Height	WCEG #	Pole Weight	Base Plate WCEG #	Shaft		
					WCEG #	AFB *	Length
Type PS	8 FT	9005-12-0001	65 Lbs	211-12-00003	200-12-00053	5 3/16"	7'-7 13/16"
Type I	10 FT	9005-12-0002	80 Lbs	211-12-00004	200-12-00054	5 1/2"	9'-7 13/16"

NOTES

DESIGN CRITERIA:
Design: 2001 AASHTO Standard Specifications for Structural Supports for Highway Signs, Luminaires and Traffic Signals.
Design wind speed: 90mph

WELDING:
Welding of structures shall be in accordance with the latest edition of the AWS Structural Welding Code D1.1-Steel
Longitudinal seam weld is 60% minimum penetration except for 6 inches from end of section at base plate it is 100% penetration.

FINISH: All components to be hot dip galvanized as per ASTM A123 / A153.

All tapered tubes are 12 sided
* AFB - across the flats at the base of the shaft, AFT - across the flats at the top of the shaft

APPROVED
Manufacturer's Pole Plan
Approved For Listing As A
Pre-Approved Drawing
WSDOT Bridge & Structures Office
By GB Date 4/5/2004

Bill of materials for one anchor bolt (4 required per pole):

#	QTY.	PART NO.	DESCRIPTION	MATERIAL
21	1	161-0.75-0001	Anchor Bolt, 3/4" Dia., Length 30"x4"	ASTM A307
22	2	154-FWN-G010	3/4" Flat Washer Narrow, Galv.	ASTM F436
23	2	153-H2H-G007	3/4"-10 Heavy Hex Nut	Grade 2 Galv.

Rev. #	REVISION DESCRIPTION	REV. DATE	BY	APPR'D

DESIGNED: LUISS BARCAN
CHECKED: IOAN GIOSAN
APPROVED: TED BROCKMAN
DATE: 01-Apr-2004

PROFESSIONAL ENGINEER SEAL
PROFESSIONAL ENGINEER
PROVINCE OF BRITISH COLUMBIA
T. A. BROCKMAN
APR 02 2004

West Coast Engineering Group Inc.
6823 NORTHGATE WAY
FERNDALE, WA, USA, 98248-8309
Ph.(360) 366-3400, Fx.(360) 366-3401
www.wceng.com

PROJECT: TYPE PS & TYPE I
Pedestrian Poles
STATE OF WASHINGTON

SCALE: NTS
QTY: -
JOB #: -
SHEET 1 OF 1
DWG. #: WSDOT-PP-02
REV. 0

THE INFORMATION CONTAINED IN THIS DRAWING IS THE PROPERTY OF WEST COAST ENGINEERING GROUP, AND ANY INFORMATION OBTAINED FROM ITS CONTENT SHALL BE USED ONLY FOR THE SPECIFIC PURPOSE AUTHORIZED BY WEST COAST ENGINEERING GROUP.