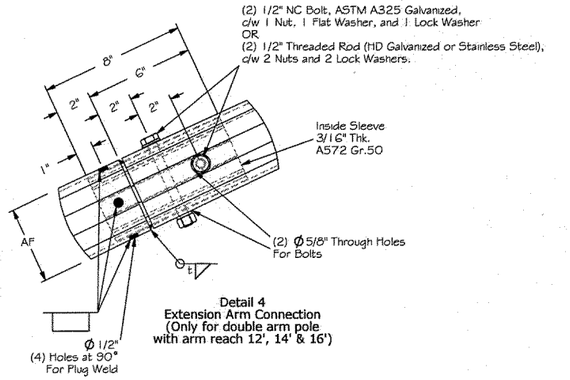

Detail 4
Extension Arm Connection
(Only for double arm pole with arm reach 12', 14' & 16')

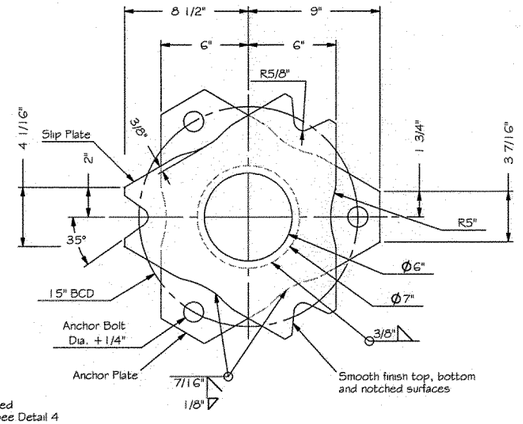

Detail 6
Slip Base Assembly
(If required)

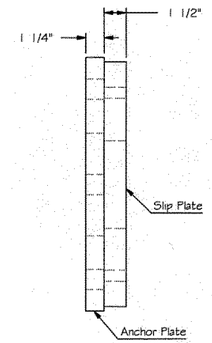

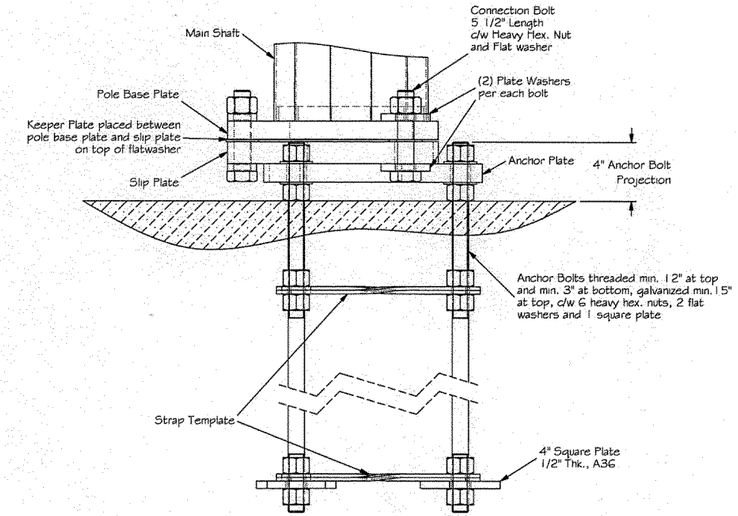

Slip Base & Anchor Bolt Cage Detail

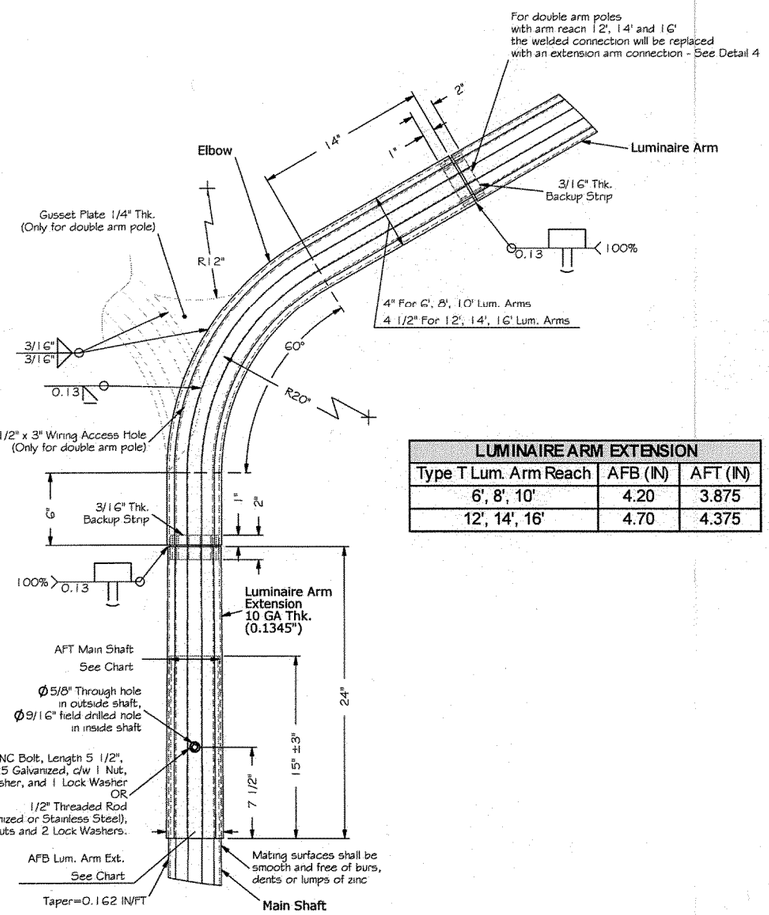

Detail 2
Slip Joint & Elbow

LUMINAIRE ARM EXTENSION		
Type T Lum. Arm Reach	AFB (IN)	AFT (IN)
6', 8', 10'	4.20	3.875
12', 14', 16'	4.70	4.375

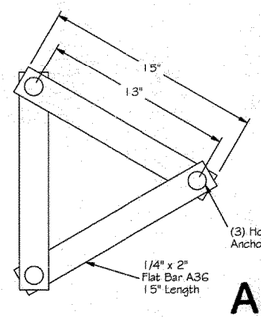

Strap Template Detail

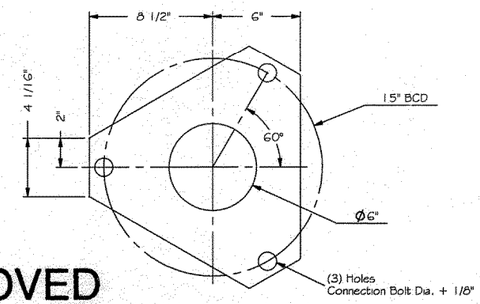

Keeper Plate Detail
28GA

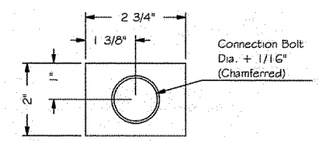

Plate Washer Detail
1/2" Thk. A36

APPROVED

Manufacturer's Pole Plan
Approved For Listing As A
Pre-Approved Drawing
WSDOT Bridge & Structures Office
By GB **Date** 12/5/05

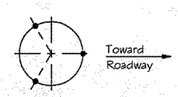

Anchor Bolt Layout
Slip Base

DESIGNED:	TED BROCKMAN
DRAWN:	LUISS BARCAN
APPROVED:	TED BROCKMAN

PROFESSIONAL ENGINEER SEAL
PROFESSIONAL ENGINEER — PROVINCE OF BRITISH COLUMBIA — T. A. BROCKMAN
DATE: 01-Apr-2004
NOV 22 2005

West Coast Engineering Group Inc.
6823 NORTHGATE WAY
FERNDALE, WA, USA, 98248-8309
Ph.(360) 366-3400, Fx.(360) 366-3401
www.wceng.com

PROJECT: LIGHTING POLE, Type T, STATE OF WASHINGTON	SCALE: NTS
	QTY: -
JOB #: -	SHEET 2 OF 2
DWG. #: WSDOT-LP-02	REV. 2

THE INFORMATION CONTAINED IN THIS DRAWING IS THE PROPERTY OF WEST COAST ENGINEERING GROUP, AND ANY INFORMATION OBTAINED FROM ITS CONTENT SHALL BE USED ONLY FOR THE SPECIFIC PURPOSE AUTHORIZED BY WEST COAST ENGINEERING GROUP.