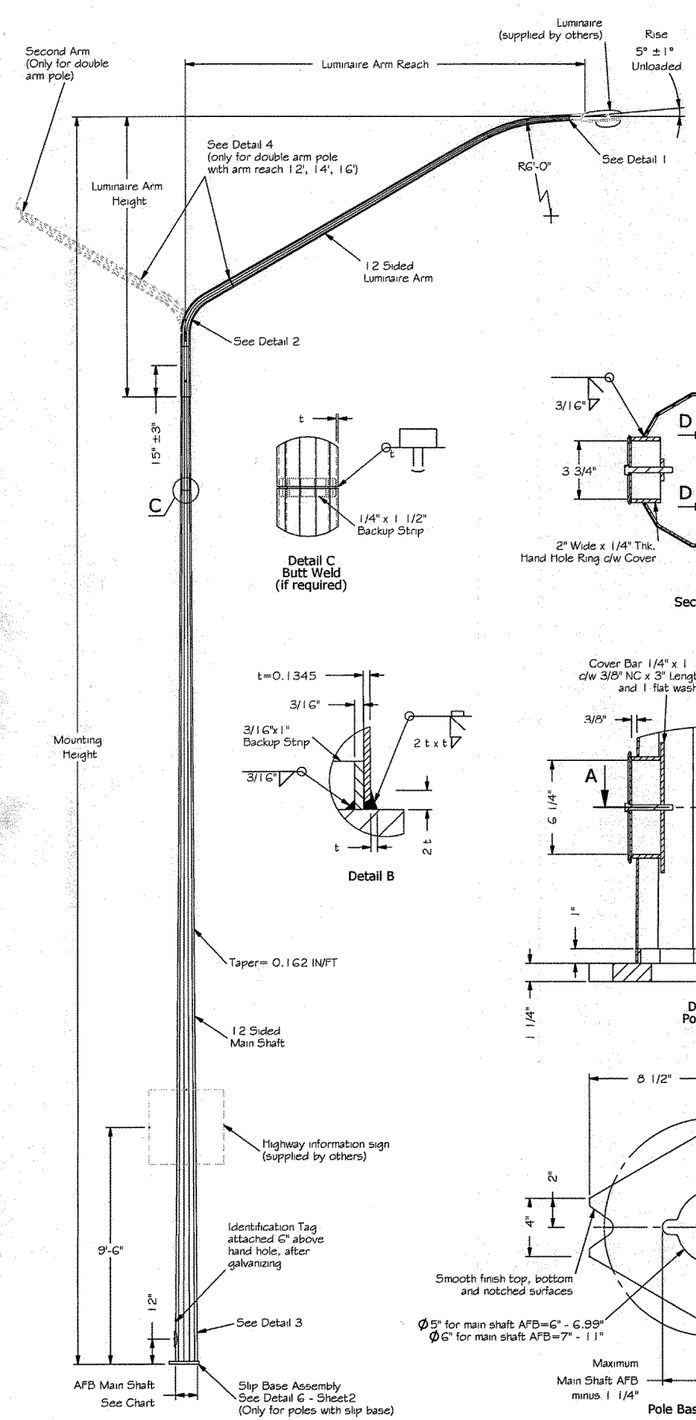

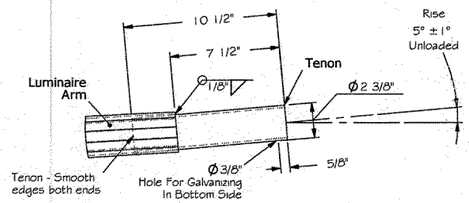

Detail 1
Luminaire Tenon

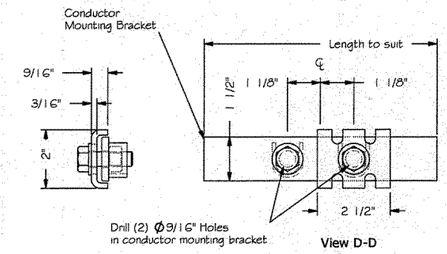

View D-D

Detail C
Butt Weld
(if required)

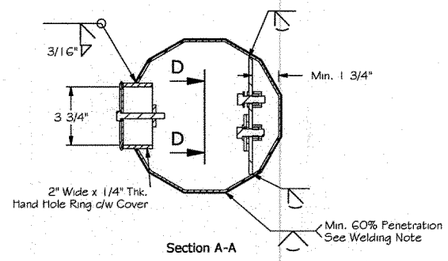

Section A-A

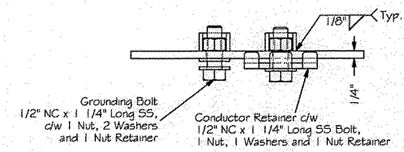

Detail B

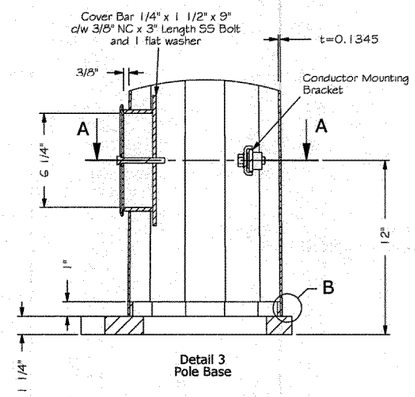

Detail 3
Pole Base

Anchor Bolt Layout
Fixed Base

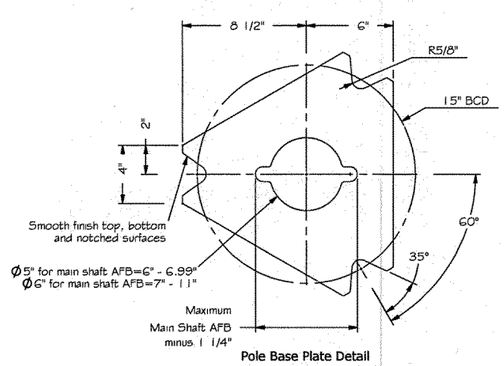

Pole Base Plate Detail

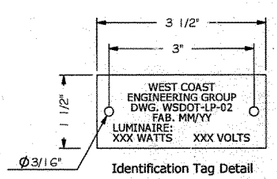

Identification Tag Detail

Notes:
-Material: 14GA Aluminum or SS
-Secure to pole with (2) 0.125" rivets
-Tag stamped or etched as shown

MAIN SHAFT							
Mounting Height x Lum. Arm	Main Shaft AFB * (IN)	Main Shaft AFT * (IN)	Main Shaft Length (IN)	THK **	Connection Bolt Dia.	Anchor Bolt Dia.	Anchor Bolt Length
25'x 6'	6.96	3.60	247.8	0.1345"	1"	1"	54"
25'x 8'	6.79	3.60	235.4	0.1345"	1"	1"	54"
25'x10'	6.60	3.60	221.6	0.1345"	1"	1"	54"
25'x12'	6.92	4.10	207.7	0.1345"	1"	1"	54"
25'x14'	6.73	4.10	193.9	0.1345"	1"	1"	54"
25'x16'	6.54	4.10	180.0	0.1345"	1"	1"	54"
30'x 6'	7.77	3.60	307.8	0.1345"	1"	1"	54"
30'x 8'	7.60	3.60	295.4	0.1345"	1"	1"	54"
30'x10'	7.42	3.60	281.6	0.1345"	1"	1"	54"
30'x12'	7.73	4.10	267.7	0.1345"	1"	1"	54"
30'x14'	7.54	4.10	253.9	0.1345"	1"	1"	54"
30'x16'	7.35	4.10	240.0	0.1345"	1"	1"	54"
35'x 6'	8.58	3.60	367.8	0.1345"	1"	1"	54"
35'x 8'	8.42	3.60	355.4	0.1345"	1"	1"	54"
35'x10'	8.23	3.60	341.6	0.1345"	1"	1"	54"
35'x12'	8.54	4.10	327.7	0.1345"	1"	1"	54"
35'x14'	8.35	4.10	313.9	0.1345"	1"	1"	54"
35'x16'	8.17	4.10	300.0	0.1345"	1"	1"	54"
40'x 6'	9.40	3.60	427.8	0.1345"	1"	1"	54"
40'x 8'	9.23	3.60	415.4	0.1345"	1"	1"	54"
40'x10'	9.04	3.60	401.6	0.1345"	1"	1"	54"
40'x12'	9.35	4.10	387.7	0.1345"	1"	1"	54"
40'x14'	9.17	4.10	373.9	0.1345"	1"	1"	54"
40'x16'	8.98	4.10	360.0	0.1345"	1"	1"	54"
45'x 6'	10.21	3.60	487.8	0.1345"	1 1/8"	1 1/8"	54"
45'x 8'	10.04	3.60	475.4	0.1345"	1 1/8"	1 1/8"	54"
45'x10'	9.85	3.60	461.6	0.1345"	1 1/8"	1 1/8"	54"
45'x12'	10.17	4.10	447.7	0.1345"	1 1/8"	1 1/8"	54"
45'x14'	9.98	4.10	433.9	0.1345"	1 1/8"	1 1/8"	54"
45'x16'	9.79	4.10	420.0	0.1345"	1 1/8"	1 1/8"	54"
50'x 6'	11.02	3.60	547.8	0.1345"	1 1/8"	1 1/8"	54"
50'x 8'	10.85	3.60	535.4	0.1345"	1 1/8"	1 1/8"	54"
50'x10'	10.67	3.60	521.6	0.1345"	1 1/8"	1 1/8"	54"
50'x12'	10.98	4.10	507.7	0.1345"	1 1/8"	1 1/8"	54"
50'x14'	10.79	4.10	493.9	0.1345"	1 1/8"	1 1/8"	54"
50'x16'	10.60	4.10	480.0	0.1345"	1 1/8"	1 1/8"	54"

NOTES

WELDING:
Welding of structures shall be in accordance with the latest edition of the AWS Structural Welding Code D1.1-Steel
Longitudinal seam weld is 60% minimum penetration except for 6 inches from end of section at base plate, slip joint and elbow it is 100% penetration.
FINISH: All components to be hot dip galvanized as per ASTM A123 / A153.
All tapered tubes are 12 sided
* AFB - across the flats at the base of the shaft, AFT - across the flats at the top of the shaft.
** 0.1345" Nominal thickness, 0.1265" minimum thickness.

LOADING INFORMATION

DESIGN CRITERIA:
Design Standard: 2001 AASHTO Standard Specifications For Structural Supports For Highway Signs, Luminaires And Traffic Signals.
- Design wind speed - 90 mph (3 second gust wind speed)
- Design life / recurrence interval - 25 years
- Maximum 2 luminaires per pole
- Luminaire data: Area=3.3 ft^2, Weight=60 Lbs
- Highway information sign (max. area=10 ft^2) mounted @ 9'-6" from base.
- Installation of a 50 ft pole with double luminaire arms on a slip base is not allowed.

CAFL AT CRITICAL
-Pole to base plate connection = E
-Slip joint = E
-Main shaft = E

LUMINAIRE ARM TYPE "T"					
Luminaire Arm Reach	AFB*	AFT*	THK **	Shaft Length (FT)	Luminaire Arm Height (FT)
6'	3 7/8"	2 3/4"	0.1345"	3.88	5.49
8'	3 7/8"	2 3/4"	0.1345"	5.95	6.53
10'	3 7/8"	2 3/4"	0.1345"	8.26	7.68
12'	4 3/8"	2 3/4"	0.1345"	10.56	8.84
14'	4 3/8"	2 3/4"	0.1345"	12.88	9.99
16'	4 3/8"	2 3/4"	0.1345"	15.19	11.15

MATERIAL DATA	
COMPONENT	GRADE
All tubes	A607 GR.50
Base Plate	A572 GR.50
Slip Base Plates	A572 GR.50
Keeper Plate	A446 GR.A
Pipes	A53 GR.B
Anchor Bolts	ASTM A449
Connection Bolts	A325 - Type1
Nuts	A563-DH
Washers	ASTM F436
Handhole Ring & Cover	ASTM A36

APPROVED
Manufacturer's Pole Plan
Approved For Listing As A
Pre-Approved Drawing
WSDOT Bridge & Structures Office
By GB Date 12/05/05

REV.	DESCRIPTION	DATE	BY	APPRD
2	Added the note with the minimum thickness for the nominal 0.1345" thickness	11/22/2005	LB	TB
1	Modified the length of the anchor bolts	6/14/2005	LB	TB

DESIGNED: TED BROCKMAN
DRAWN: LUISS BARCAN
APPROVED: TED BROCKMAN

PROFESSIONAL ENGINEER SEAL
PROFESSIONAL ENGINEER
PROVINCE OF BRITISH COLUMBIA
T. A. BROCKMAN
DATE: 01-Apr-2004
NOV 22 2005

West Coast Engineering Group Inc.
6823 NORTHGATE WAY
FERNDALE, WA, USA, 98248-8309
Ph.(360) 366-3400, Fx.(360) 366-3401
www.wceng.com

PROJECT: LIGHTING POLE
Type T
STATE OF WASHINGTON

SCALE: NTS
QTY: -
JOB #: -
SHEET 1 OF 2
DWG. #: WSDOT-LP-02
REV. 2

THE INFORMATION CONTAINED IN THIS DRAWING IS THE PROPERTY OF WEST COAST ENGINEERING GROUP, AND ANY INFORMATION OBTAINED FROM ITS CONTENT SHALL BE USED ONLY FOR THE SPECIFIC PURPOSE AUTHORIZED BY WEST COAST ENGINEERING GROUP.