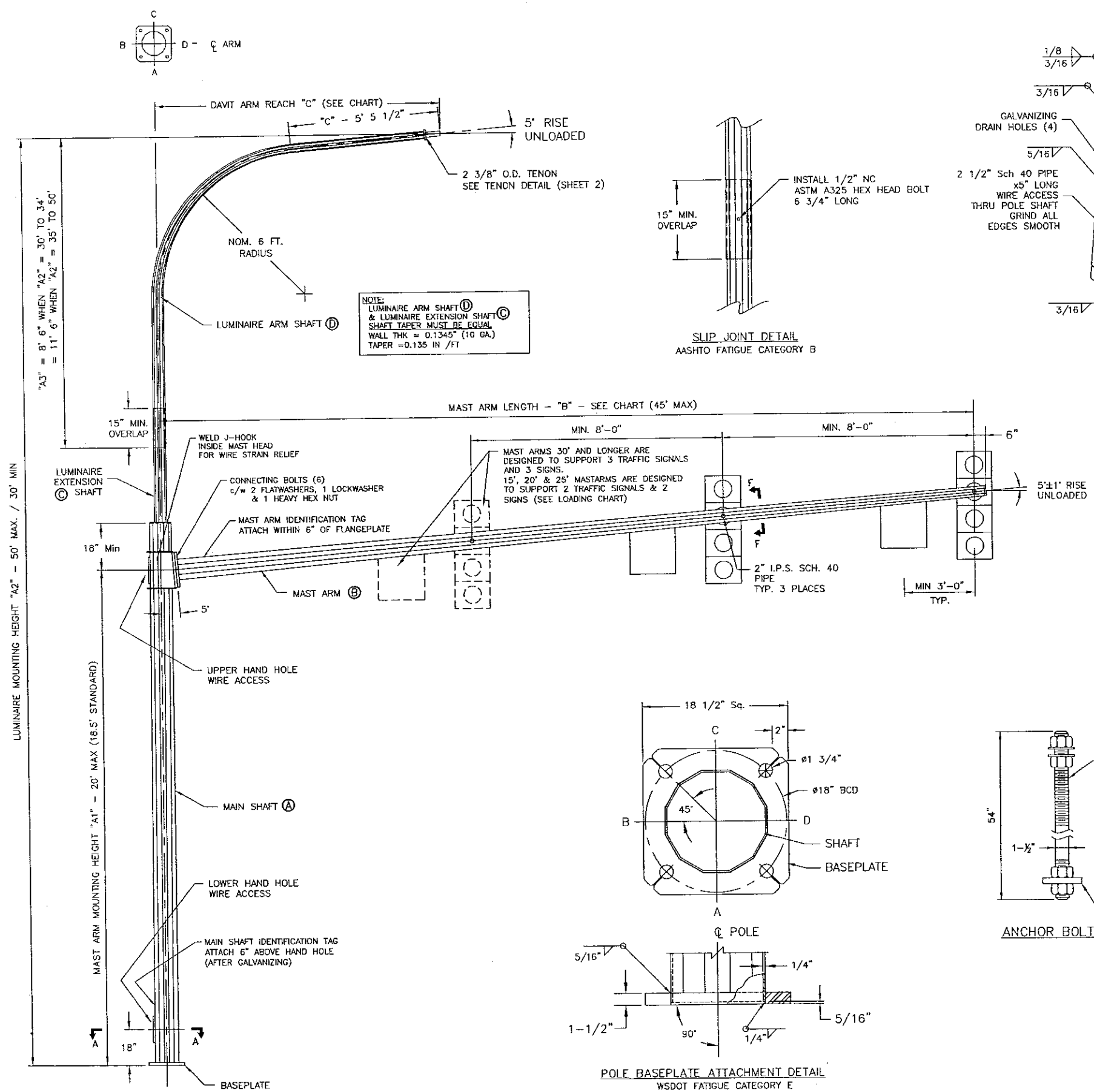

Ⓐ MAIN SHAFT (1)			
AFB(3)	AFT(4)	THK	LENGTH
13"	12"	1/4"	21' 6" MAX

Ⓑ MAST ARM SHAFT (1)				CONNECTING BOLTS (6 SETS)		SIGN & SIGNAL MAX. (2) LOADING XYZ
MAST ARM LENGTH "B"	AFB(3)	AFT(4)	THICKNESS IN.	DIA.	LENGTH	
15'	7 1/2	5"	0.120"	1 1/4	5"	350.6
20'	8–1/4	5"	0.120"	1 1/4	5"	523.6
25'	9"	5"	0.120"	1 1/4	5"	696.6
30'	9–3/4"	5"	3/16	1 1/4	5"	1096.8
35'	10 1/2"	5"	3/16	1 1/4	5"	1356.3
40'	11–1/4"	5"	3/16	1 1/4	5"	1615.8
45'	12"	5"	3/16	1 1/4	5"	1875.3

THK.=10Ga.

Ⓒ LUMIN. EXT SHAFT (1)			
LUMIN. MOUNT HT. "A2"	AFB(3)	AFT(4)	SHAFT LENGTH
30'	5 3/8"	5 1/8"	1' 9"
35'	6"	5 1/2"	3' 9"
40'	6 11/16"	5 1/2"	8' 9"
45'	7 3/8"	5 1/2"	13' 9"
50'	8 1/16"	5 1/2"	18' 9"

(1) DODECAGON SECTION (12 SIDED)
(2) X–SECTION AREA OF SIGNAL OR SIGN x DISTANCE FROM CENTERLINE OF SIGNAL OR SIGN TO CENTERLINE OF MAIN SHAFT
(3) AFB – "ACROSS THE FLATS" AT THE BASE OF THE SHAFT
(4) AFT – "ACROSS THE FLATS" AT THE TOP OF THE SHAFT

THK.=10Ga.

LUM. ARM REACH "C"	Ⓓ LUMIN. ARM SHAFT (1) "A2" = 35' to 50'			Ⓓ LUMIN. ARM SHAFT(1) "A2" = 30' to 34'		
	AFB(3)	AFT(4)	SHAFT LENGTH	AFB(3)	AFT(4)	SHAFT LENGTH
6'	6"	4 1/16"	14' 8"	5 5/8"	4 1/16"	11' 8"
8'	6"	3 13/16"	16' 6"	5 5/8"	3 13/16"	13' 6"
10'	6"	3 9/16"	18' 4"	5 5/8"	3 9/16"	15' 4"
12'	6"	3 5/16"	20' 2"	5 5/8"	3 5/16"	17' 2"
14'	6"	3 1/16"	22' 0"	5 5/8"	3 1/16"	19' 0"
16'	6"	2 13/16"	23' 10"	5 5/8"	2 13/16"	20' 10"

DESIGN: ALL STANDARDS ARE DESIGNED TO THE 2001 AASHTO STANDARD SPECIFICATIONS FOR STRUCTURAL SUPPORTS FOR HIGHWAY SIGNS, LUMINAIRES AND TRAFFIC SIGNALS.
DESIGN WIND SPEED – 90 MPH (3 SECOND GUST WIND SPEED)
DESIGN LIFE / RECURRENCE INTERVAL – 25 YEAR
FATIGUE CATEGORY – III (GALLOPING, NATURAL & TRUCK GUSTS)
MAXIMUM TRUCK GUST WIND SPEED – 65 MPH
EACH STRUCTURE HAS A LOAD CAPACITY AS SHOWN IN THE ABOVE CHART. DESIGN AREAS OF SIGNS AS SIGNALS AS FOLLOWS:

TRAFFIC SIGNAL
FACE AREA = 12.3 FT.^{2}
WIND DRAG COEFFICIENT = 1.2
WEIGHT = 80 LB.
ICE AREA = 32 FT.^{2}

TRAFFIC SIGN
FACE AREA = 6.7 FT.^{2}
WIND DRAG COEFFICIENT = 1.12
WEIGHT = 25 LB.
ICE AREA = 6.7 FT.^{2}

WELDING: WELDING OF STRUCTURES SHALL BE IN ACCORDANCE WITH THE CURRENT AASHTO SPECIFICATIONS FOR STRUCTURAL SUPPORTS OF HIGHWAY SIGNS, LUMINAIRES & TRAFFIC SIGNALS. LONGITUDINAL SEAM WELD IS 60% MINIMUM PENETRATION EXCEPT IN 6 INCHES FROM END OF SECTIONS IT IS 100% PENETRATION.

FINISH: ALL COMPONENTS TO BE HOT DIP GALVANIZED AS PER ASTM A123 / A153

MATERIAL DATA (UNLESS OTHERWISE NOTED)	
COMPONENT	GRADE
ALL TAPERED TUBES	ASTM A572 Gr. 50
BASE PLATE	ASTM A36
FLANGE PLATES	ASTM A36
PIPE TENONS	ASTM A53 Gr. B
ANCHOR BOLTS	ASTM A449
CONNECTING BOLTS	ASTM A325 – Type 1
NUTS	ASTM A563–DH
FLAT WASHERS	ASTM F436

PROFESSIONAL ENGINEER — PROVINCE OF BRITISH COLUMBIA — S. D. BRADWELL
24-SEP-02

No. REQ'D.	W.O. No.	FILE No.	DATE	P.O. No.	CUSTOMER	LOCATION

APS Inc. American Pole Structures Inc.

REV.No.	CHANGE	BY	APP.	DATE
1	UPDATES AS PER WSDOT REQUESTS	S.B.		09–02

TITLE: WSDOT TYPE III TRAFFIC STRUCTURE 45' MAX. MAST ARM LENGTH "J" STYLE LUMINAIRE ARM

DRAWN BY	S.B.	APP. BY		DWG. No.	REV. No.	SHT. 1 of 2 SHTS.
DATE	10–AUG–02	SCALE	N.T.S.	WS–T3J–L	1	