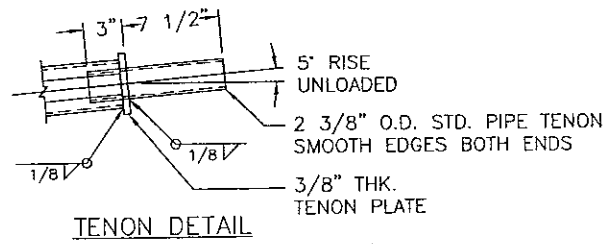

TENON DETAIL
FOR 6 FT. TO 14 FT. REACH LUMIN. ARM

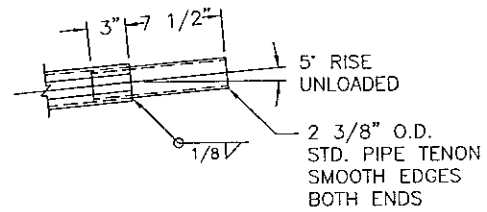

TENON DETAIL
FOR 16 FT. REACH LUMIN. ARM

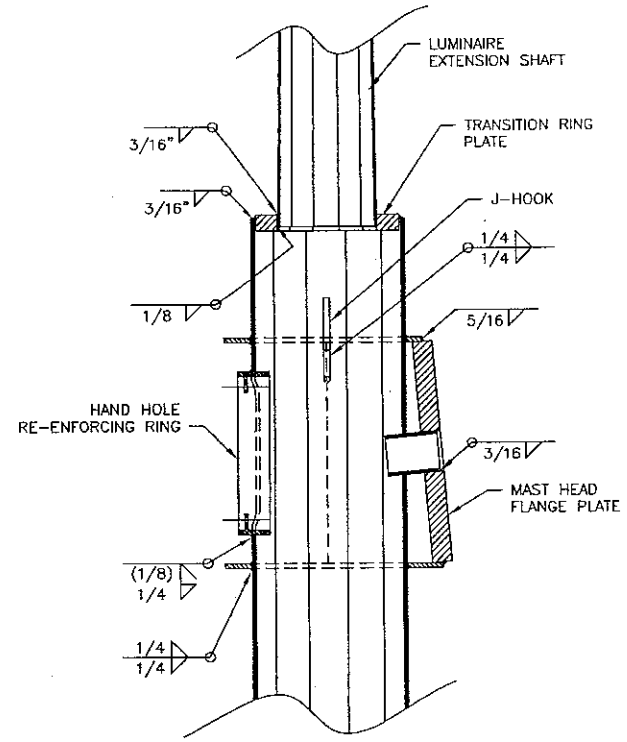

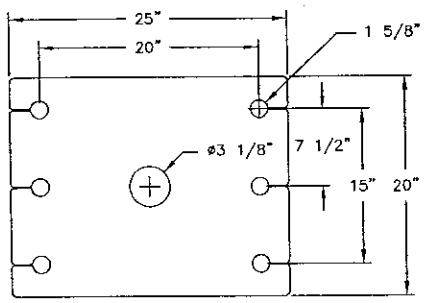

MAST HEAD FLANGE PLATE
(2" PLT)

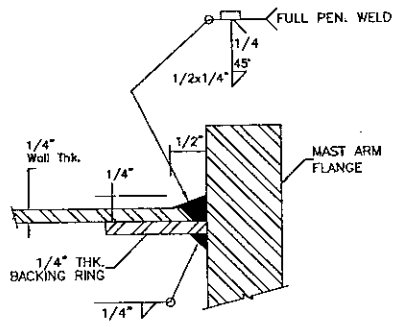

SECTION B-B FULL-PENETRATION
GROOVE WELD DETAIL
(SIGNAL ARM)
WSDOT FATIGUE CATEGORY D

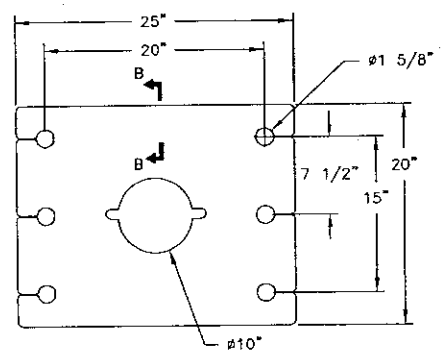

MAST ARM EXTENSION FLANGE PLATE
(2" PLT)

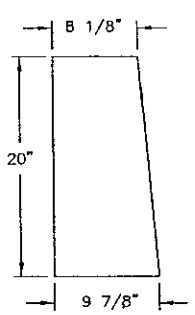

MAST HEAD SIDE PLATE
(1/2" PLT)

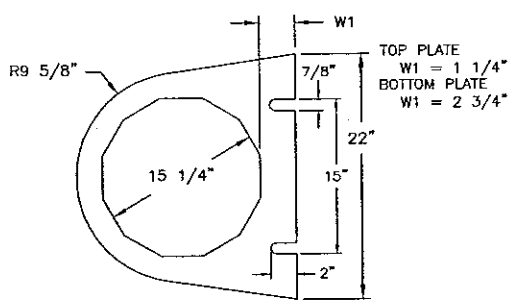

TOP & BOTTOM MAST HEAD PLATE
(3/8" PLT)

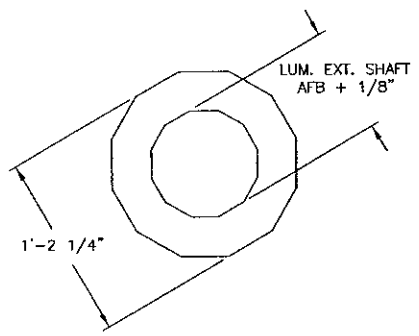

TRANSITION RING PLATE
(1" PLT)

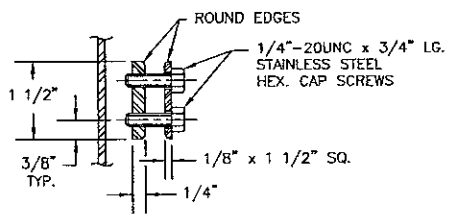

SECTION E-E
CONDUCTOR MOUNTING BRKT

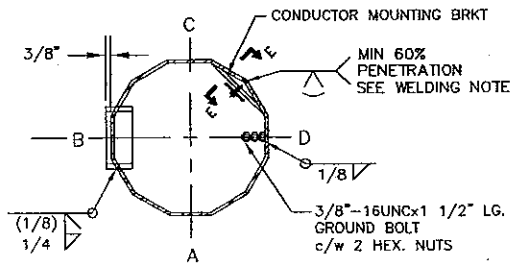

SEC A-A - HAND HOLE DETAIL
AASHTO FATIGUE CATEGORY E

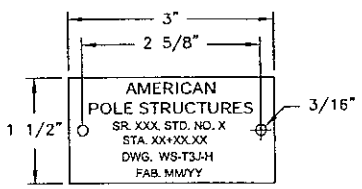

IDENTIFICATION TAG

MAT'L - 14 GAUGE ALUMINUM
SECURE TO POLE WITH TWO (2)
0.125" SS OR ALUMINUM RIVETS
LETTERS TO BE STAMPED OR ENGRAVED
MINIMUM LETTER HEIGHT = 3/16"

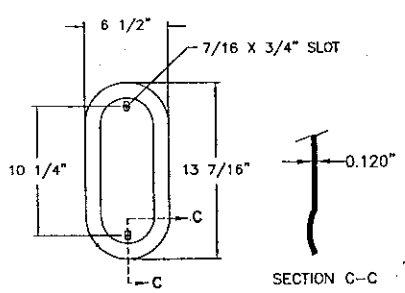

SECTION C-C

HANDHOLE COVER

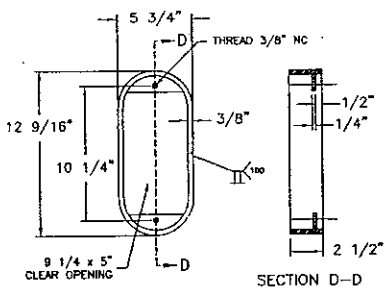

SECTION D-D

HAND HOLE RING

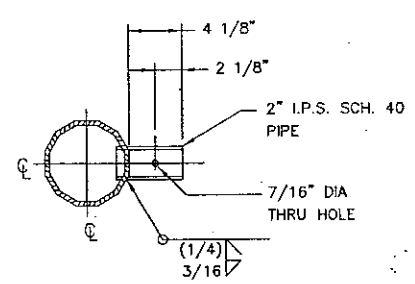

SECTION F-F
SIGNAL TENON MOUNT DETAIL

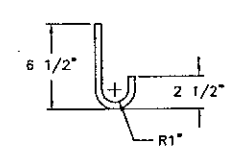

J-HOOK
(1/2" ASTM A36 R.9.)

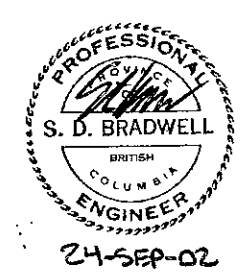

No. REQ'D.	W.O. No.	FILE No.	DATE	P.O. No.			CUSTOMER	LOCATION
							APS Inc. American Pole Structures Inc.	
1	UPDATES AS PER WSDOT REQUESTS			S.D.		09-02	TITLE WSDOT TYPE III TRAFFIC STRUCTURE 65' MAX. MAST ARM LENGTH "J" STYLE LUMINAIRE ARM	
REV. No.	CHANGE			BY	APP.	DATE		
DRAWN BY	S.B.		APP. BY				DWG. No. WS-T3J-H	REV. No. 1 / SHT. 2 of 2 SHTS.
DATE	10-AUG-02		SCALE	N.T.S.				